TURBOMACHINERY & PUMP SYMPOSIA | HOUSTON, TX
DECEMBER 14-16, 2021
SHORT COURSES: DECEMBER 13, 2021

TURBOMACHINERY FOR OLEFINS PRODUCTION

Klaus Brun, Ph.D.
Director, Research & Development
Elliott Group
Jeannette, Pennsylvania, USA

Stephen Ross
Manager, Compressor Development, R&D
Elliott Group
Jeannette, Pennsylvania, USA

Adam Neil
Manager, Turbine Development, R&D
Elliott Group
Jeannette, Pennsylvania, USA

Shane Harvey
Manager, EP Applications Engineering
Elliott Group
Jeannette, Pennsylvania, USA

Brian Pettinato
Manager, Product Development, R&D
Elliott Group
Jeannette, Pennsylvania, USA

Derrick Bauer
Manager, Materials Engineering, R&D
Elliott Group
Jeannette, Pennsylvania, USA

Dr. Rainer Kurz
Manager
Solar Turbines, Inc.
San Diego, California, USA

Dr. Brun is the Director of Research & Development at Elliott Group where he leads a group of over 60 professionals in the development of turbomachinery and related systems for the energy industry. His past experience includes positions in product development, engineering, project management, and executive management at Southwest Research Institute, Solar Turbines, General Electric, and Alstom. He holds nine patents, authored over 350 papers, and published three textbooks on energy systems and turbomachinery. Dr. Brun is a Fellow of the ASME and won an R&D 100 award in 2007 for his Semi-Active Valve invention. He also won the ASME Industrial Gas Turbine Award in 2016 and 11 individuals ASME Turbo Expo Best Paper awards. Dr. Brun is the chair if the 2020 Supercritical CO2 Power Cycles Symposium, past chair of the ASME-IGTI Board of Directors, the ASME Oil & Gas Applications Committee, and ASME sCO2 Power Cycle Committee. He is also a member of the API 616 Task Force, the ASME PTC-10 task force, the Asia Turbomachinery Symposiums Committee, and the Supercritical CO2 Symposium Advisory Committee. Dr. Brun is currently the Executive Correspondent of Turbomachinery International Magazine and Associate Editor of the ASME Journal of Gas Turbines for Power.

Brian Pettinato is Manager of Product Development at Elliott Group in Jeannette, Pennsylvania. He has been with Elliott Group since 1995. His primary area of expertise is machinery dynamics. Prior to joining Elliott Group, he worked as a project engineer for CentriMarc. Mr. Pettinato received his B.S. (1989) and M.S. (1992) Mechanical Engineering degrees from the University of Virginia. He has coauthored over twenty technical papers and holds three U.S. patents. Mr. Pettinato is a fellow member of ASME, a member of STLE, and a registered Professional Engineer in the State of Pennsylvania. He serves on the Turbomachinery Advisory Committee of Texas A&M and on the API 684 rotordynamics task force.

Mr. Ross is Manager of Compressor Development in the Research & Development Department at Elliott Group. He has 38 year of compressor experience including positions in technical services (field support) and centrifugal compressor design at Elliott Group and Ingersoll-Rand. He presented at the Turbomachinery Symposium in 1991, 2002, 2003, and 2014. He has a BSME from The Pennsylvania State University, is a registered mechanical engineer in the state of Pennsylvania, and a member of ASME.

Mr. Bauer is the Manager of the Materials Engineering Department at Elliott Group which supports development of materials and associated fabrication processes for their turbomachinery product lines. His prior experience within the department includes materials lab operations, production assistance and aftermarket support including remaining life assessment testing on steam turbines and FCC Hot Gas Expanders. He has authored articles for the Turbomachinery Symposiums and for the Gulf South Rotating Machinery Symposiums. Derrick holds an MS in Materials Science and Engineering from the University of Pittsburgh. He is an active member of ASM and NACE.

Mr. Neil is the Manager for Turbine Development at Elliott Group where he leads a cross-functional team of engineers, aero-dynamicists, stress analysts, technical programmers, engineering designers and drafters. The Turbine R&D group develops leading edge technologies for next generation products to improve efficiency, reliability, and cost to meet market demands for turbine offerings in the Engineered Product, Industrial Product, Cryodynamic Product, and Global Service business units. Prior to his management position in Research and Development, Mr. Neil spent time as the lead turbine design engineer in Turbine Development, as an application engineer in Engineered Solutions, and a technical services engineer in Global Service with responsibilities providing global support to the various product lines.

Dr. Rainer Kurz is the Manager, Systems Analysis, at Solar Turbines Incorporated in San Diego, California. His organization is responsible for analyzing compression requirements, predicting compressor and gas turbine performance, for conducting application studies, and for field performance testing. Dr. Kurz attended the Universitaet der Bundeswehr in Hamburg, Germany, where he received the degree of a Dr.-Ing. in 1991. He has authored numerous publications about turbomachinery related topics, is an ASME fellow, holds 2 patents, and is a member of the Turbomachinery Symposium Advisory Committee.

Shane has been with Elliott for 15 years, initially with Elliott Turbomachinery Canada based in Calgary, Alberta but is now is the Manager of Application Engineering for Elliott Group based in Houston Texas. Shane has a bachelors degree in Mechanical Engineering from the University of Calgary and is the current Chair of the Rotating Equipment Subcommittee of the Ethylene Producers Conference. Shane's work as an Application Engineer with Elliott has included world scale ethylene and Propane Dehydrogenation (PDH) for customer around the globe. Prior to Elliott Shane held various mechanical engineering roles at AMEC Canada and Syncrude Canada.

ABSTRACT

This tutorial covers the basics, applications, and operation of compressors, expanders, and steam turbines in the plastics industry. Plastics manufacturing, which is part of the petrochemical industry, produces polymer materials, often called plastics, and is a major user of rotating machinery. Modern plastic manufacturing processes, such as ethylene plants, utilize a wide range of turbomachinery that must flexibly operate under harsh fluid conditions with long life and minimal maintenance downtime. Cracked gas feed-gas, propylene, and ethylene refrigeration compressor trains are usually custom engineered to meet the high volume, high efficiency requirements of today's "mega" ethylene plants. In ethylene service, the fluids pose unique aerodynamic, materials, and structural design challenges including wet gas service, fouling, high gas path temperatures, and corrosive, flammable, and sometimes toxic service. These requirements make the design, packaging, controls, application and operation of turbomachines in ethylene plants highly complex and challenging. Operational and technical details of turbine and compression applications such as gas boost, refrigeration, cracked gas compression, propylene compression/ethylene compression, and steam turbine drivers will be discussed for polymer processing. Topics covered in this tutorial will include: ethylene and propylene process fundamentals, turbomachines in polymer process applications, design conditions, and special operational considerations in the plastic industry service.

INTRODUCTION

Plastics have become so prevalent in modern life that it is hard to imagine a product that does not utilize plastic in some form. From plastic packaging to the most advanced chemical resistant seal material, plastics play a key and ever changing role in our world. From their first discovery in 1855, the use of plastics has continued to rise at a rate greater than global GDP, and the use of plastics continues to find new applications on a daily basis. The root of the word "plastic" comes from the Greek word "plastikos" which means to "grow" or "form." It is a common term used to describe a wide range of synthetic or semi-synthetic hydrocarbon materials that can be derived from a wide range of feedstocks such as fossil fuels, biological matter, and minerals. Plastic is a polymeric material that has the capability of being molded or shaped using heat and pressure. Its inherent ability to be molded relatively easily into complex shapes, as well as its other special properties such as low density, low electrical conductivity, transparency, and toughness, allows plastics to be made into a great variety of commercial products. Although plastic can be derived from a wide variety of sources, the vast majority of plastic (>96%) is produced from fossil oil and gas. I.e., naturally occurring crude oil or natural gas hydrocarbons are converted via a complex chemical process into different materials with a wide range of desired physical properties within the group of plastics.

To manufacture plastics, natural hydrocarbon products such as ethane, propane, butane, and refined products such as naphtha are broken into single carbon monomers using various types of cracking processes and then re-combined into the desired long-chain plastics using polymerization. This conversion is often achieved by first producing an intermediary product, such as naphtha, in a refining process including distillation, cracking and reforming. Refinery naphtha is volatile mixtures of C5 to C10 liquid hydrocarbons that is then transported to an ethylene plant for further processing. Alternatively, natural gas derived from ethane, propane, and butane can be directly used to feed an ethylene plant without the requirement for any crude oil pre-refining. Because of the growing availability of natural gas in the world, this has become the preferred method to provide feedstock to an ethylene plant.

Ethylene is the most important intermediate organic chemical to make plastics since it can easily be used as a basic building block for longer chain polymers. It is the lightest olefinic hydrocarbon but does not freely occur in nature. The raw materials for an ethylene plant can be refinery gas, natural gas (for ethane, propane and butane), various liquid hydrocarbons, or naphtha fractions from crude oil. However, the majority of the world's ethylene plants operate with either naphtha or ethane feedstocks. Polyethylene and polypropylene are the two most common types of plastics making up nearly half of all global plastic production. They are both derived from petrochemical feedstock ethylene and propylene respectively. Ethylene acts as feedstock for many of the remaining types of plastics as well as polyvinyl chloride and polyethylene terephthalate (commonly known as PET). As such, the production of ethylene from the cracking of hydrocarbons has played a key role in the development of turbomachinery in the petrochemical industry.

In an ethylene plant, naphtha, ethane, propane or butane are decomposed thermally in a steam cracker in the presence of water vapor where they are split into shorter hydrocarbons known as major intermediaries. Steam crackers are large, complex units that produce the important building blocks ethylene, propylene, butadiene and aromatics from gaseous or liquid hydrocarbons. The hydrocarbon feedstocks are cracked at temperatures between 1470°F and 1580°F (800°C and 860°C). Ethylene plant steam cracker products are primarily gaseous olefins and aromatics. The olefins are mostly ethylene, propylene, butane and butadiene while the aromatics consist mostly of benzene, toluene and xylene. These small olefin and aromatic molecules must first be separated by a refrigeration liquid dropout process and can then be reformulated by linking them together using a range of heat, pressure, and chemical processes into long molecular chains called plastic polymers. These specifically engineered plastic polymers are usually pelletized and then sold as feedstock to a wide range of manufacturers for commercial consumer and industrial products.

Between 1950 and today, the total world annual production of plastics has risen from 0.5 million metric tons to approximately 370 million metric tons. Although there are resource, environmental, and regulatory pressures that aim to contain further plastics production growth, this general trend is expected to continue with total world plastic production expected to exceed 400 million metric tons by 2030. In parallel with this trend, ethylene world demand, and in turn the size of a typical ethylene plant size, has grown (see Figure 1). Between 1960 and today, average, new ethylene plant sizes have increased from below 10 kilo tons per year (KTA) to exceeding 2000 KTA of ethylene production. This has made it imperative to develop larger turbomachinery trains that meet the larger capacity and demands of these ever increasing plants. Turbomachinery manufacturers have met the requirements of historical plant capacity growth by increasing the scale of their ethylene plant centrifugal compressors and steam turbines. These methods proved robust for plant capacity increases applied to date, but alternative turbomachinery design approach methods may be required to meet the demands of continued growth beyond current mega ethylene capacity.

Most of the critical, complex, and high power turbomachinery in the plastic making processes reside within the refinery and ethylene plants. A detailed overview of turbomachinery for refinery process was previously provided by Brun et al. (2019) and will therefore not be further discussed herein. Thus, this tutorial will primarily focus on turbomachinery design, application, function, and operation within ethylene plants. The tutorial will provide a basic understanding of the processes as well as the type, power requirements, utilities, and application challenges of operating turbomachines in ethylene plants.

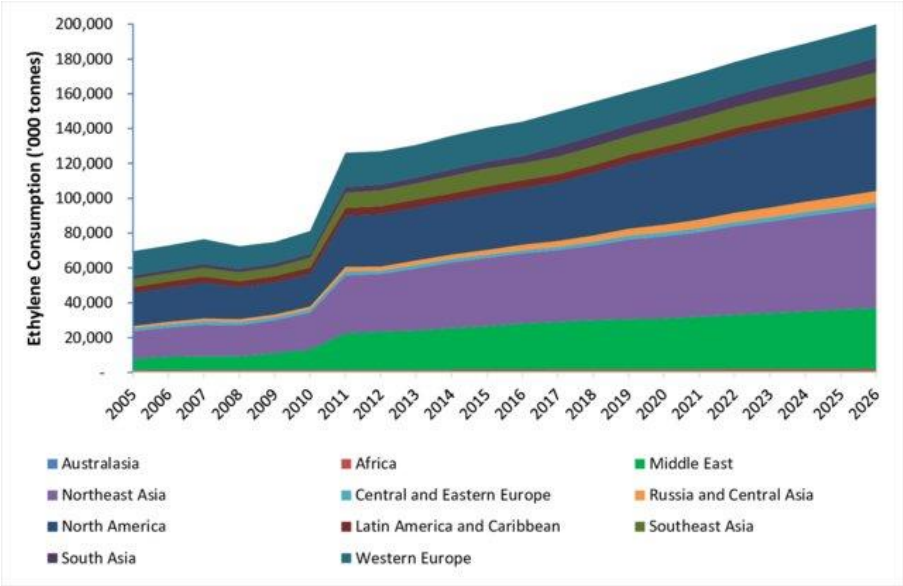

Figure 1: World Ethylene Demand (Canadian Energy Research Institute)

TURBOMACHINERY FOR ETHYLENE PLANTS

In an ethylene plant, compressors are used to increase pressure of the feed or cracker product gas, refrigeration is used to assist in specific gravity separation, and steam turbines are generally used as drivers for compressors. Figure 2 shows a typical schematic of a conventional ethylene plant. Here, the gas that is coming out of the cracking furnace is used in one or more boilers to create steam which then goes into a quench tower. There is often some additional cooling to further lower the cracked gas temperature before it enters the quench tower. In the quench tower, the heavy hydrocarbons drop to the bottom, and the light gas rises to the top. The cooled, light cracked gas, which is slightly above atmospheric pressure, is then compressed to approximately 400 – 600 psia using the cracked gas compression train. The gas is then dried to avoid ice formation plugging before being cooled to approximately -150˚F using a combination of propylene (to -40˚F) and ethylene refrigeration (to -150˚F) cycles. Sometimes a gas expander is used to reduce the gas temperature further. Both refrigeration cycles are closed loop, multi-stage refrigeration loops and use centrifugal compressors driven by steam turbines for compression.

As previously noted, the steam cracking of hydrocarbons (ethane, propane and/or naphtha) into the desired olefins of ethylene and propylene requires the heating of the feedstock to temperatures above 800˚C and quickly stopping the reaction maintaining the creation of the target compounds. The nature of the chemistry requires low, partial pressure of the feedstock so that the dilution steam is utilized. This leads to very large volumes of low pressure gas that must be compressed to allow for scrubbing, drying and separating. The large compressors utilized for this service have different names based on the process designer such as cracked gas compressor, charge gas compressor or product gas compressor, but the basic features of the equipment remain the same. Common features of these compressors are a very large volume, low pressure suction of the first stage, and a multi-section process with head per section being limited to prevent polymersization of the gas due to elevated temperatures. Cracked gas compressors typically have three to five stages of compression depending on the feedstock and process design. The head ratio and large volumes lend the first stage well to double flow compressor configuration. While some early CGC compressors were gas turbine driven, they are all steam turbine driven today. Demands to increase plant capacity and reduce capital has driven the need for the application of higher steam energies with very high pressure steam levels in the >2000psi / >1000˚F class.

Figure 3 shows the three critical turbomachinery trains typically found in a typical 600 KTA ethylene plant. Here, the cracked gas stream train is driven by a steam turbine and uses a double flow, low pressure compressor and two high pressure, straight-through multi-stage compressors with intercooling between each stage. Other arrangements with more stages and cases are also common. The refrigerant trains shown in Figure 2 are also driven by steam turbines but are usually limited to multi-stage, single casing straight-through compressors.

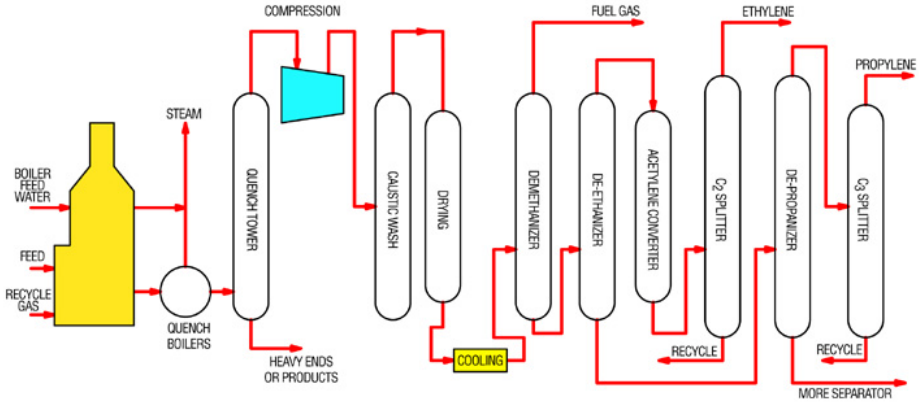

Figure 2: Simplified Ethylene Process Diagram

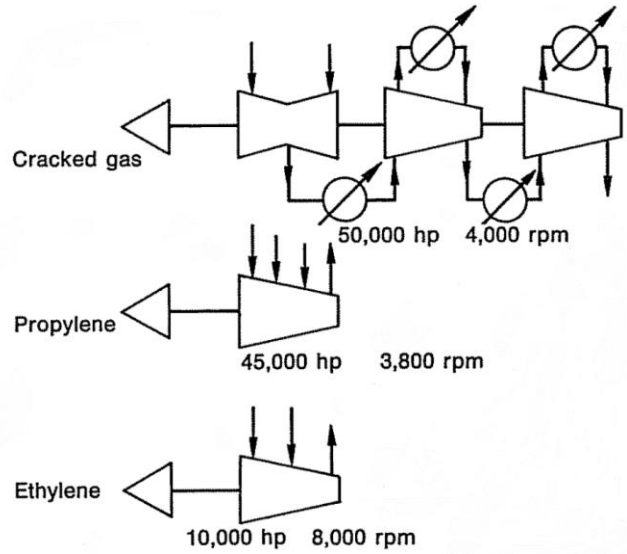

Figure 3: Typical Turbomachinery Trains for Ethylene Plant

Figure 4 shows a typical cracked gas compression process diagram. Four sections of compression are utilized to achieve the desired pressure ratio. With intercooling between casings, this limits temperature in each section to below 225˚F and improves compression efficiency. In the system shown, a caustic water wash tower is inserted between sections 3 and 4 (at approximately 100-200 psig) to remove carbon dioxide and hydrogen sulfide. Also, in some plants, the cracked gas is passed through a vessel for removal of acetylene, methyl acetylene and other higher acetylenes and di-olefins. At the discharge of each compression case, there is a discharge cooler and knock-out drum to collect heavier hydrocarbon liquids as pressure is increased. After the last stage of compression, the gas is usually first cooled using water spray and then enters the refrigeration process for further plant gas separation.

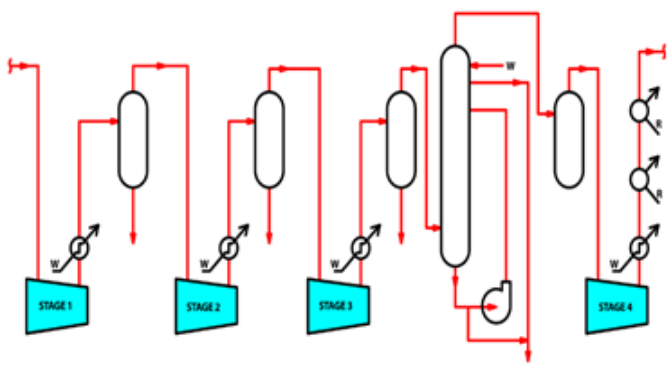

Figure 4: Four-stage Cracked Gas Compressor Train with Intercooling, Knock-out Drums, and Caustic Water Wash

Figure 5 shows a typical propylene refrigeration system. A conventional refrigeration system typically uses a reverse Rankine or Brayton cycle. It is beyond this tutorial to describe the details of well-understood refrigeration processes, but for those interested, a good description of this can be found in Fabrega et al. (2010). Nonetheless, it is important to note that this is a multi-stage refrigeration process where the single case compressor has one or more side loads and extractions to provide compression for each cooling stage. The operating conditions and design challenges of ethylene and propylene compressors will be discussed later herein.

Thus, within an ethylene plant, the three most critical and high power turbomachinery applications are cracker feed gas, ethylene refrigeration, and propylene refrigeration compression. Since heat is required for the cracking process, steam is readily available in an ethylene plant such that compressors are usually driven by steam turbines. There are many other pieces of rotating machinery in an ethylene plant such as pumps, plant air compressors and liquid/gas expanders, but the highest power demand and most important machinery are the three above mentioned compressor trains. The design, function, and operation of these three turbomachinery trains, as well as some other key compressor applications, will be discussed in more detail below.

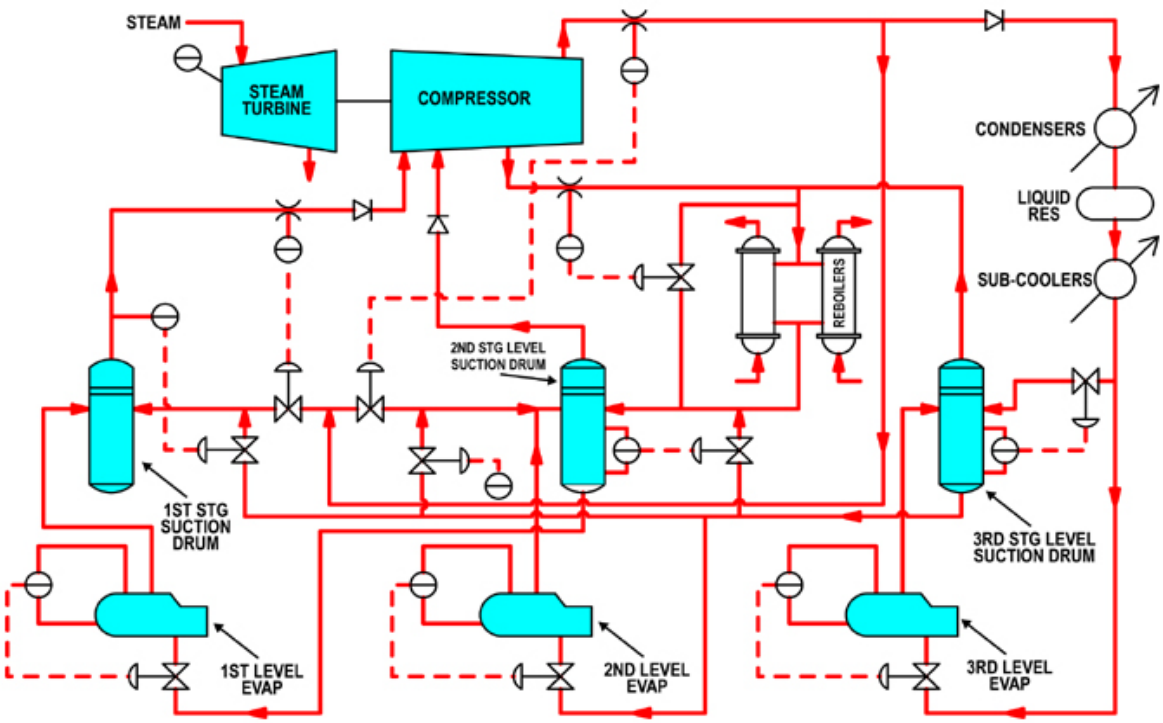

Figure 5: Typical Process Diagram of Propylene Refrigeration System

ETHYLENE PLANT CENTRIFUGAL COMPRESSOR APPLICATIONS

As noted above, ethylene is a building block chemical used to manufacture the world's most widely used thermoplastic, polyethylene, as well as other important chemical products such as ethylene dichloride (a component of polyvinyl chloride or PVC plastic), ethylbenzene (a component of polystyrene plastic), ethyl chloride, ethylene oxide, ethylene glycol and synthetic ethanol. Current demand is steadily rising and manufacturing plant sizes are increasing. Fifty years ago, plants may have produced 300 KTA (kilo tons per annum), whereas today they have five times that capacity. This section briefly describes some of the large, robust, centrifugal compressors used in ethylene production including their features and challenges.

Commercial Ethylene Process

The most common method to produce ethylene is by steam cracking. There are a variety of process licensors including ABB Lummus, KBR, Linde AG, Technip and others. A hydrocarbon feedstock is heated in a pyrolysis furnace to around 540˚C (1000˚F) and then further heated very rapidly in the radiant zone of the furnace to 815-1095˚C (1500-2000˚F) where the long, saturated molecule chains are cracked into smaller ones. In the same furnace, boiler feed water is converted to high-pressure steam to drive the plant's turbines. The cracked gas then flows to the quench tower where it is rapidly cooled. Heavy products are removed from the bottom of the quench tower while the gas continues to the cracked gas compressors. The hydrocarbon feedstocks can be ethane or propane (from natural gas) or heavier feeds such as naphtha or gasoil commonly found in Europe and Asia.

Cracked Gas Compressors

Gas leaving the quench tower will enter the cracked gas compressor string at a temperature around 38˚C (100˚F). The compressor inlet pressure will be slightly above atmosphere, typically 1.3 – 1.4 bar absolute (19.0 – 20.3 psia). The gas molecular weight and composition will vary with the source of the feedstock, but a typical MW is 24 with a composition of roughly 30% ethylene, 23% methane, 19% hydrogen, 8% ethane, 7% propylene, 4% water and 9% other constituents, mostly hydrocarbons. The gas may contain H2S and CO2. These conditions, along with the high flow rates of a modern ethylene facility producing 700 – 1500 KTA of ethylene, result in very high inlet volume flow rates up to 435,750 m3/h (256,500 ICFM). The cracked gas compressor string will typically be arranged as two to four large-frame, horizontally split casings or bodies. Process pipe connections are in the lower half of the casings so that the upper half can easily be removed for maintenance of the internals. The first body, which is the first process stage, is most often a double-flow arrangement with two inlet connections and two or three impellers in series on each end of the rotor. The gas exits through a common discharge connection at the center of the casing. No more than three impellers will be used in each stage to keep the compressor discharge temperature below 90˚C (195˚F). At higher temperatures, the rate of the chemical reactions, which cause internal fouling, can increase exponentially. The gas then passes through an intercooler before entering the second body. The casing nearly always includes spray nozzles between the impellers for injection of wash oil used for online cleaning of the internal flow passages and/or water injection that can provide evaporative cooling. These injection nozzles use an orifice to atomize the liquid that prevents erosion and high cycle fatigue damage to the impellers. If necessary, the nozzles may be fixed or removable for cleaning while running without shutting down the string.

Since the volume reduction of gas in the first body is approximately 2:1, the second body is usually the same frame size as the first body, and the first section (second process stage) may even use the same flow coefficient impellers, but in a series arrangement which only passes half of the volume flow. Gas will exit the second body to an intercooler, then return to make the second section (third process stage). These compressors will have a total of four or six impellers. Matching frame size and speed results in optimized efficiency. Construction features will be the same as the first body.

Depending on the desired discharge pressure of the cracked gas string, there may be one or two additional bodies. These will be smaller frames than the first two bodies due to continued reduction of the gas volume. A third body can have up to ten impellers with intercooling between two sections. This longer bearing span is possible since the smaller frame will be running at a lower than typical speed being coupled to the larger frame's first and second bodies. If a higher pressure is required (more than ten impellers), there can be a third and fourth body with cooling between them. In some cases, a speed increasing gear may be included in the string to boost the speed of the smaller frame(s) or they may use a separate driver. If H2S is present in the cracked gas, it may be removed by scrubbing the gas with a caustic wash. This is typically done between the last sections of compression, and that compressor can have a back-to-back arrangement so that any leakage between sections will be sweet to sour gas and not sour to sweet gas, which is possible with a series arrangement that has a pressure drop through the intercooler between the sections.

At this time, steam drives nearly all cracked gas compressors since heat is always available from the cracking furnaces. Most strings use a single steam turbine coupled to all compressor bodies. These turbines have a power rating up to 90,000 kW (120,000 HP). Figure 6 shows a three body cracked gas string. The first process stage is the middle compressor, which consists of a double flow arrangement with an external volute. The second and third process stages are the compressor next to the steam turbine, a series arrangement with an external volute and inlet plenum. The final process stages are the compressor at the far left.

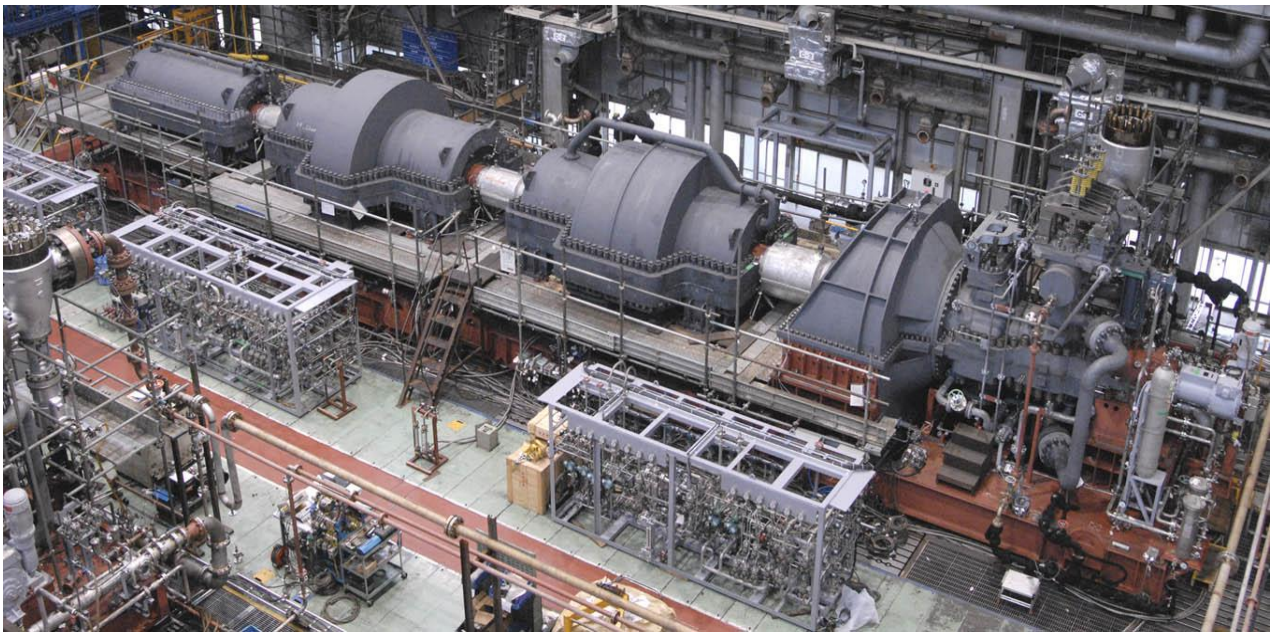

Figure 6: Cracked Gas Compressor String on Test Stand

Refrigeration Compressors

The cracked gas is dried, then cooled to approximately -101˚C (-150˚F) by cascaded ethylene and propylene refrigeration loops. Once cooled, various other gases are separated by their different boiling points in a series of towers. Each refrigeration compressor is made up of multiple stages operating at different levels of cooling. The inlet (lowest) temperature for ethylene service is -101˚C (-150˚F). Ethylene refrigeration strings are typically small frame sizes and can be one or two bodies. Recent ethylene plants in China and elsewhere in Asia have used binary and even tertiary gas mixtures for cooling in place of pure ethylene. The inlet (lowest) temperature for propylene service is -36˚C (-32˚F). Propylene refrigeration strings are typically large frame, single body, high-horsepower compressors. Figure 7 shows a typical propylene refrigeration compressor. Propane is occasionally used instead of propylene. Most refrigeration compressors are also steam turbine driven, although a few are electric motor drives.

Figure 7: Propylene Refrigeration Compressor

Other Compressors in Ethylene Plants

Various feedstocks, such as refinery off gas, will yield other products that use centrifugal compressors. These can include the Unsaturated Gases Compressor, the H2 Rich Gas Compressor, and the Refinery Off-Gas Compressor. The propylene-propane splitter column in the separation section of the ethylene plant can receive an operational benefit by the use of a heat pump compressor. These have been applied to roughly half a dozen of the most recent plants. They are more common in propylene plants using PDH technology, so this will be discussed in more detail in a later section.

Select Compressor Features, Benefits and Challenges

Cracked gas compressors have low inlet pressures, making them very favorable for the use of double flow, first stage compressors. The double flow compressor allows for a significant volume reduction in the first stage, while leading to a second stage that has a very similar compressor performance and excellent speed matching, enabling the use of a single driver for both. A double flow compressor splits the first stage flow into two balanced inlets at each compressor end and compresses to a common discharge at the center. The benefit is that twice the volume flow can be handled by a smaller, faster, and more efficient compressor. Because both sides of the compressor are symmetric, the compressor experiences little or no thrust, has no balance piston, and has inherently equalized seals.

The earliest ethylene plant compressors from the 1950s used wet seals. These were not an issue for the cracked gas string, but oil ingestion was a serious concern for the refrigeration strings. All units from the early 2000s and on use dry gas seals. The now nearly-standard tandem seal arrangement is somewhat overkill for the first stage cracked gas and refrigeration applications, considering the very low inlet pressures. Careful engineering of the seal buffer system is required and must take into account the buffer source pressure and primary vent pressure to ensure that a positive pressure differential is maintained across both the primary and secondary seal faces at all times. Another concern with dry gas seals in cracked gas and propylene compressors is the turning gear operation necessary for the steam turbine drivers. Prolonged running of the large-diameter sealing faces at low speeds (without lift off and separation) can cause wear and operational problems.

Most compressor rotors in cracked gas and propylene service have six to eight impellers. The large diameter process pipe connections and high efficiency staging require a substantial axial length. All of these factors combine to produce long bearing spans. Single body ethylene refrigeration compressors with multiple side stream nozzles may actually have their bearing span controlled by how closely the nozzles can be located on the casing. Large main shaft diameters, optimized inlet nozzle designs, advanced rotor dynamic analyses, optimized tilting pad journal bearings, and carefully balanced rotors allow for operation with minimal vibration.

The biggest challenge in cracked gas compressor operation is mitigation of internal fouling caused by the gas itself. Since compressor OEM's do not typically employ advanced chemists who can address the reactions that create fouling, the best that can be done is to:

- Deliver high efficiency staging to keep temperatures low
- Perform CFD studies on internals if gas velocity is determined to play a role
- Provide practical systems to inject solvent or water for evaporative cooling
- Provide coatings to internal parts that resist foulant build up

Additional aerodynamic improvements, such as high flow coefficient impellers and optimized flow path design, as well as rotordynamic advancements, are discussed in later sections of the paper.

CENTRIFUGAL COMPRESSORS IN PDH PLANTS

Propylene is another building block chemical used to manufacture the second most common thermoplastic, polypropylene, as well as other important chemical products such as acrylonitrile and propylene oxide (also used in plastics production), cumene, oxo alcohols, and acrylic acid. Until recently, steam crackers in ethylene plants and fluid catalytic cracking (FCC) units in refineries produced mostly propylene as a byproduct. Current demand is exceeding supply from these sources so plans to produce propylene as the primary product are being constructed at a rapid pace. Propylene accounted for less than 3% of production in the early 2000s, but that is expected to increase to 30% by 2030 (Quershi, et al. 2020). Most of the existing and planned commercial propylene plants use propane dehydrogenation (PDH) technology that incorporates centrifugal compressors. This section briefly describes some of these large, robust centrifugal compressors, including their features, challenges and how they apply to PDH technology (Ross, et al. 2020).

Commercial PDH Processes

The two leading process licensors for PDH technology are Honeywell UOP Oleflex® and Lummus CATOFIN® (Maddah 2018). In both processes, heat exchangers and charge heaters raise fresh and recycled propane feed to reaction temperature. The charge then passes through a series of reactors with catalyst beds where the dehydrogenation reaction occurs. Reactor design and catalysts are different for the two processes, but the next step for both is to raise the pressure of the gas using large centrifugal compressors before sending it to the recovery and purification section.

Reactor Effluent Compressors

Gas leaving the Honeywell UOP Oleflex reactor section (effluent) passes through several coolers before entering the reactor effluent compressor string at a temperature around 43˚C (109˚F). The compressor inlet pressure varies from near atmospheric to sub-atmospheric and can be as low as 0.8 bar absolute (11.4 psia). The gas has a molecular weight of 23 to 24 and is composed of roughly 46% hydrogen, 34% propane, 15% propylene, and 5% other constituents – mostly heavier hydrocarbons. These conditions, along with the high flow rates of a modern PDH facility producing 450 - 750 KTA of propylene, result in very high inlet volume flow rates up to 527,000 m3/h (310,000 ICFM). The reactor effluent compressor string will typically be arranged as two large-frame, horizontally split casings or bodies.

Process pipe connections are in the lower half of the casing so the upper half can be removed easily for maintenance of the internals. The first body is often a double-flow arrangement with two inlet connections and three or four impellers in series on each end of the rotor. The gas exits through a common discharge connection at the center. Pressure ratios for the first body range from 2.3 to 4.6 with a discharge temperature of 93 to 146˚C (200 to 294˚F). The gas then passes through an intercooler before entering the second body. The casing may include spray nozzles between the impellers for injection of wash oil for online cleaning of the internal flow passages.

The second body is usually one frame size smaller than the first due to the reduced gas volume. This body will have five to eight impellers in a series arrangement, typically without intercooling, giving pressure ratios between 3.8 to 5.6 and a discharge temperature of 111 to 151˚C (232 to 304˚F).

Reactor effluent compressors have a variety of driver arrangements. Many use a single steam turbine coupled to both the first and second bodies. These turbines have a power range of 35,500 to 53,400 kW (47,600 to 71,650 HP). Other strings drive each compressor individually by a synchronous or induction motor, with or without variable frequency drives and with or without speed increasing gearboxes. Figure 8 shows a motor and gear driven first stage compressor.

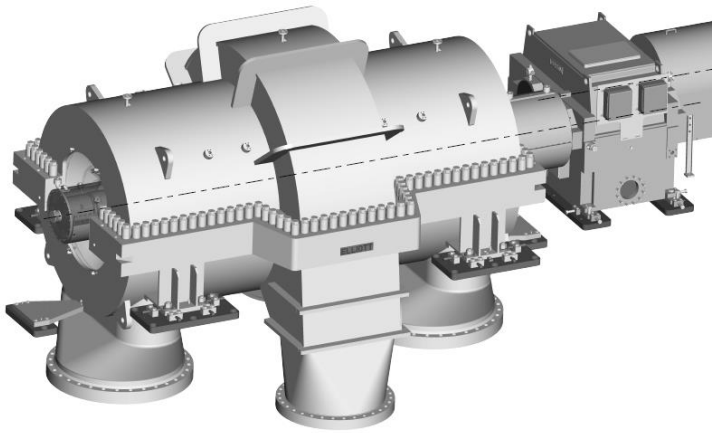

Figure 8: Reactor Effluent Stage 1 and Gearbox

Heat Pump Compressors

The propylene-propane splitter column in the recovery and purification section of the Honeywell UOP Oleflex process lends itself to the use of a heat pump compressor, which is typically a two-stage, large-frame compressor in a tandem arrangement. The first stage takes gaseous flow from the column overhead (nearly pure propylene) and compresses it with one or two impellers. The heat of compression raises the temperature. This warm flow exits the casing and most of it is sent to the reboiler at the column bottom. Once cooled in the reboiler and condensed, this flow becomes additional liquid propylene product. A small amount of the first-stage flow, 14 – 18% on a mass flow basis, is returned to the second stage and is further compressed by two or more impellers. Because this flow is significantly reduced, these second-stage impellers are typically smaller in frame size and have low-flow coefficients. This mismatch of internal components becomes a challenge for the designer. A water-fed aftercooler condenses the second-stage discharge gas that joins the rest of the liquid propylene product. Having the second stage allows some operational flexibility in the event of process upsets.

A steam turbine or motor and speed-increasing gearbox can drive the heat pump compressor. Despite the energy required to drive the compressor, it is still economical as it replaces the utility heat that would be required for the reboiler and allows the column to operate at a lower pressure. Figure 9 is a schematic of the heat pump compressor process. Figure 10 shows a heat pump compressor rotor.

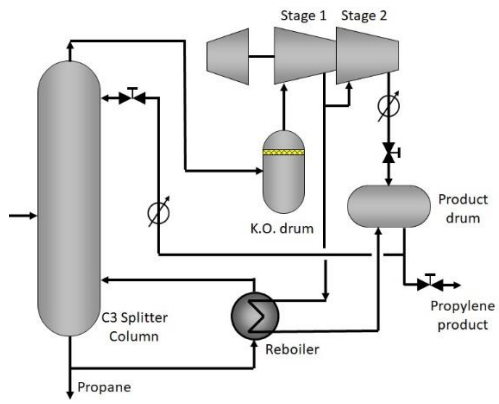

Figure 9: Heat Pump Compressor Process Schematic

Figure 10: Heat Pump Compressor Rotor

Product Gas Compressors

In the Lummus CATOFIN process, product gas compressors serve a similar purpose to the reactor effluent compressors in the Honeywell UOP Oleflex process. Gas leaving the CATOFIN reactor section passes through several coolers before entering the product gas compressor string at a temperature around 38˚C (100˚F). Pressure is very sub-atmospheric, as low as 0.24 bar absolute (3.5 psia). The gas has a molecular weight around 29 and is composed of roughly 28% hydrogen, 37% propane, 24% propylene, and 11% other constituents – mostly heavier hydrocarbons. These conditions, along with the high flow rates of a modern PDH facility producing 550 – 900 KTA of propylene (or a combination of propylene and isobutylene), also result in very high inlet volume flow rates up to 721,900 m3/h (424,900 ICFM). The product gas compressor string typically will be arranged for three stages of compression. The first stage may be a large-frame, horizontally split, double-flow arrangement. Alternatively, the higher flow first stages may consist of two separate, very large frame compressors operated in parallel. Pressure ratios for the first body can range from between 3.3 and 4.3 with a discharge temperature of 121˚C (250˚F) or less. The gas then passes through an intercooler before entering the second and third stages.

The second and third stages typically consist of three or four impellers each on a single rotor in a large frame casing. An intercooler is located between the second and third stages. The overall pressure ratio for this casing or body is around 14.0 and the discharge temperature for each stage is 121˚C (250˚F) or less. All casings typically include spray nozzles between the impellers for injection of wash oil for online cleaning of the internal flow passages. Spray nozzles may be included to inject water for evaporative cooling.

Product gas compressors use a variety of driver arrangements. These include a single steam turbine coupled to one, two, or three bodies with a rated power up to 44,657 kW (60,000 HP). Another option includes a synchronous motor with a speed increasing gearbox.

Refrigeration Compressors

The Lummus CATOFIN process requires both propylene and ethylene refrigeration loops to remove the light hydrocarbons (light ends) from the product gas. These compressors are similar to the refrigeration compressors used in ethylene production. Each is made up of multiple stages operating at different levels of cooling. The inlet (lowest) temperature for propylene service is -36˚C (-32˚F), and for ethylene service, it is -101˚C (-150˚F). Figure 7 shows a typical propylene refrigeration compressor.

Select Compressor Features and Benefits

Reactor effluent and product gas compressors have low inlet pressure, making them very favorable for the use of double-flow first-stage compressors. Used extensively in the first stages of ethylene cracked gas compressors, the double-flow compressor allows for a significant volume reduction in the first stage while leading to a second stage that has very similar compressor performance and excellent speed matching, enabling the use of a single driver for both. A double-flow compressor splits the first-stage flow into two balanced inlets at each compressor end and compresses to a common discharge at the center. The benefit is that twice the volume flow can be handled by a smaller, faster, and more efficient compressor. Because both sides of the compressor are symmetric, the compressor experiences little or no thrust, has no balance piston, and has inherently equalized seals.

Honeywell UOP heat pump compressors are rather unique in that the mass flows between the first and second sections are drastically different. Because the vast majority of the flow recirculates to the C3 splitter column, the first section ideally has an impeller multiple frame sizes larger than the impellers for the second section. The application of modern, high-flow coefficient staging (Jariwala 2020) allows for better matching of the impeller and casing diameters in the first and second sections, leading to lower capital cost while maintaining the expected process performance.

The first PDH compressors in the early 1990s used wet seals. All units from the early 2000s on have dry gas seals. The now nearly standard tandem seal arrangement is somewhat overkill for this application, considering the very low inlet pressures of the first-stage compressors. Careful engineering of the seal buffer system is required and must take into account the buffer source pressure and primary vent pressure, while ensuring that a positive pressure differential is maintained across both the primary and secondary seal faces at all times.

Most compressor rotors in PDH service have six to eight impellers. The large diameter process pipe connections and high efficiency staging require a substantial axial length. All of these factors combine to produce long bearing spans. Large main shaft diameters, optimized inlet nozzle designs, advanced rotor dynamic analyses, optimized tilting pad journal bearings, and carefully balanced rotors allow for operation with minimal vibration.

STEAM TURBINE DRIVERS FOR CENTRIFUGAL COMPRESSORS IN ETHYLENE PLANTS

Steam turbines are used in ethylene plants to efficiently use the energy of high pressure steam by reducing it to lower pressures while driving compressors (Figure 11). Ethylene is commonly produced by steam cracking. The furnace used to heat hydrocarbon feedstock is also used to create very high-pressure (VHP) steam from boiler feedwater. The cracking furnace temperatures in the radiant zone can reach temperatures of 1500-2000°F. This offers an extremely large amount of available energy from the steam being used. Not using this available steam would waste a significant amount of the heat energy. These steam conditions can approach upwards of 2000 psig and can exceed 1000˚F. Steam turbines are widely used as primary drivers for various compressor applications in the plant process, drivers for large turbine generators or installed to use excess steam to boost overall plant efficiency. The various processes used by different licensors can supply a varying range of steam conditions to the steam turbines. Electric motor drives have also been used in place of a steam turbine with large steam turbine generators using the available steam energy to offset the motor electric demand. The turbine drivers can operate from the primary VHP steam or are often configured with extraction and/or induction sections to optimize the usage of the plant steam.

All plants have a steam balance diagram that provides an equilibrium between steam production, consumption, losses, and makeup. In most plants, the steam balance changes because of process changes during the life of the plant. Turbine conditions and actual efficiency will impact the steam balance in a plant. There are a few main types of multi-stage steam turbines used as the primary driver for the various compressor processes to provide the steam balance: non-condensing (or backpressure), condensing, and extraction/induction type.

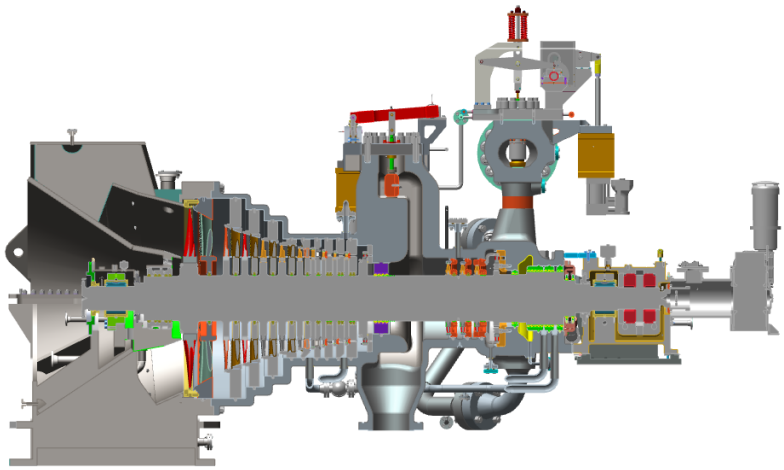

Figure 11: Typical Steam Turbine Mechanical Drive

Non-condensing Steam Turbines

The exhaust steam of this type of turbine is at a greater than atmospheric pressure and still contains a great deal of energy (Figure 12). These are most commonly used in parallel with a pressure let down station or pressure reducing valves and are widely used for driving pumps, ID and FD fans, blowers and instrument air compressors while exhausting steam at a pressure needed for another plant process. The exhaust pressure in header is controlled by a regulating valve to suit the needs of process steam pressure. These types of steam turbines are usually limited to lower power applications because of a higher steam rate resulting from lower pressure differential and available energy.

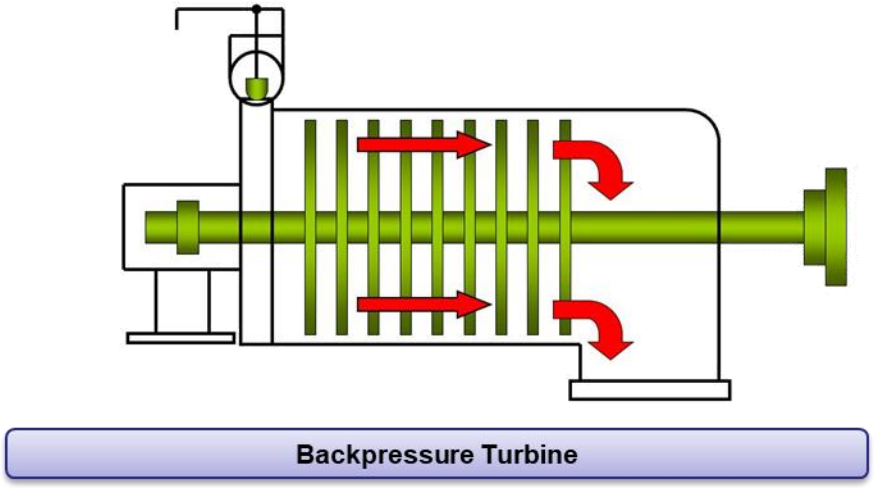

Figure 12: Schematic of Backpressure Turbine

Condensing Steam Turbines

This type of steam turbine expands steam from inlet pressure to a pressure less than atmospheric (Figure 13). This requires less steam for a given power than non-condensing types of steam turbines. The turbine exhausts to a condenser (or heat exchanger) where the steam condenses to water before being recycled through the furnace to heat. The minimum possible exhaust pressure is controlled by the cooling water temperature and the heat transfer capability of the condenser. When operating below the saturation line in the moisture region on the Mollier diagram, for any temperature the pressure is known and for any pressure the temperature is known. When operating in the superheat region, pressure and temperature are independent. Additional support systems are needed to prevent air from leaking into the steam turbine and remove non-condensable gases that enter into the exhaust system.

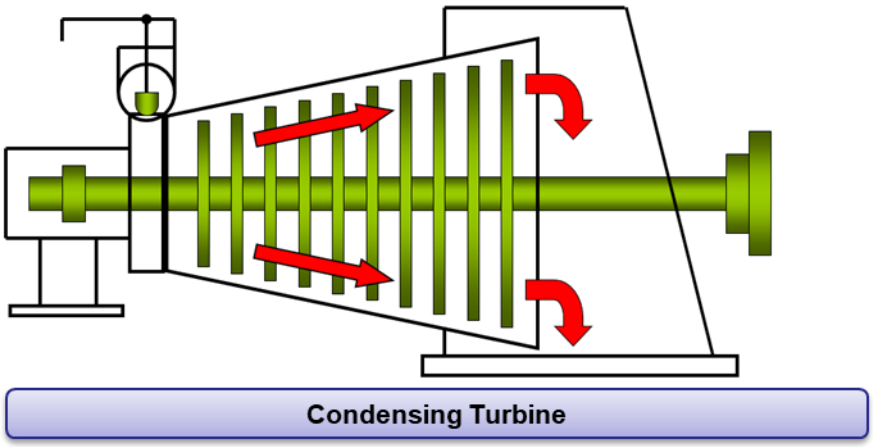

Figure 13: Schematic of Condensing Turbine

Extraction/Induction Steam Turbines

Extraction turbines are common in many applications, particularly in applications or processes requiring variable amounts of steam at a controlled pressure less than the boiler outlet pressure. In an extracting turbine, steam is extracted or leaves the aero flowpath from a point of the turbine having the desired pressure to meet process needs or required supply inlet steam to other steam turbines, as seen in Figure 14. Extraction pressure or flow may be controlled with a valve or left uncontrolled, such as for deaerator feedwater heating applications. A check valve, or non-return valve, is almost always located on the extraction piping to prevent steam from entering into the turbine causing it to continue operating after a shutdown. Induction turbines induce or allow low pressure steam to enter at an intermediate stage while taking advantage of steam produced at a low pressure usually by waste heat recovery (Figure 14). Thus, this limits the need for more costly higher pressures and temperature steam.

Controlling two variables, speed and pressure or flow, requires two regulating mechanisms. On an extraction or induction steam turbine, the two regulating mechanisms are the main inlet steam valves which control steam flow through the front section of the turbine to the extraction or induction nozzle and the extraction or induction steam valves which control flow to the steam turbine condensing section. Movements of the two valve systems must be coordinated to ensure smooth control. Coordination of the valves is defined by an extraction or induction map.

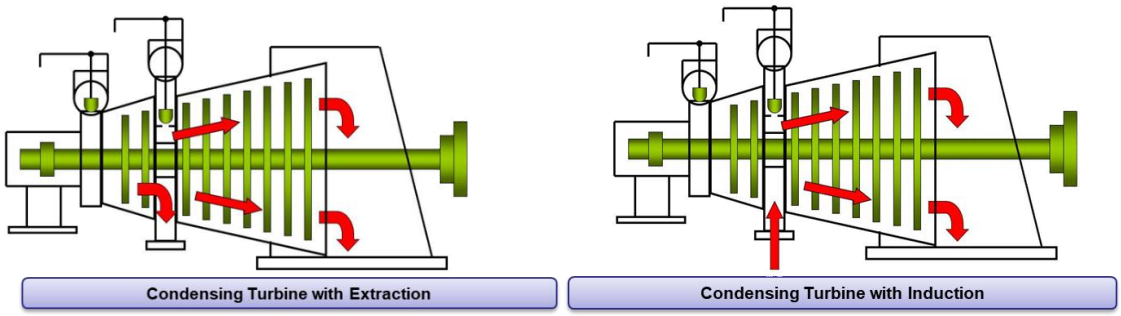

Figure 14: Extraction and Induction Turbines

Flow path design considerations

In order to provide the optimum use of the steam from the boiler and to provide steam balance, each steam turbine must be designed to operate at the plant steam conditions, meet the power demand and rotate at the desired speed of the driven compressor. Each stage of a steam turbine consists of a stationary and rotating airfoil. It is designed to take the stored energy of the steam at a given set of conditions and convert this into kinetic energy to produce a torsional force to the rotor. As steam flows through a steam turbine, high pressure and temperature steam is reduced to a lower exit pressure and temperature through stationary nozzles (stators) producing a high velocity steam jet as the steam expands. High velocity steam exiting the stationary nozzle pushes against the rotating blades (buckets) mounted onto a shaft or disks to develop a force that causes the shaft to rotate. This in turn produces useful mechanical work. A steam turbine stage consists of the stationary nozzles and at least one set of rotating blades mounted on a disk that is part of a shaft or rotor assembly. For the first stage of any turbine, the stationary nozzles are built into the nozzle ring. For all subsequent stages, the nozzles are part of the diaphragm. Diaphragms divide the turbine into stages, each operating at a successively lower pressure and higher volume flows. Successive stages thus require larger and larger nozzles and rotor blades, or more generally, provide more through-flow area.

The two primary parameters each stage is designed for is the pressure ratio and velocity ratio. The pressure ratio is the ratio of the inlet steam pressure before entering a stationary nozzle over the pressure leaving the rotating blade (Equation 1). The steam will expand as it makes its way through a series of stages that provide this sequential pressure drop, thus converting the stored potential energy of the steam into shaft rotational power along the way. The velocity ratio (Equation 2) for a stage is the ratio of the blade velocity (Equation 3) to the steam jet velocity (Equation 4). The peak efficiency of both pressure ratio and velocity ratio can vary based upon the airfoil designs. It is important that the design of each airfoil be made to produce a high level of efficiency based upon the specific operating conditions required by the turbine.

$$PR = \frac{P_{in}}{P_{exit}} \tag{1}$$

$$VRO = \frac{V_b}{V_j} \tag{2}$$

$$V_b = \frac{\pi \cdot N \cdot D}{720} \tag{3}$$

$$V_j = 224 \cdot \sqrt{\Delta h_{is}} \tag{4}$$

Here PR is pressure ratio, VRO is velocity ratio, Vb is blade velocity (ft/s), Vj is jet velocity (ft/s), N is rotor speed (RPM), D is wheel diameter, and Δh_{is} is the isentropic heat drop (ft^2/s^2).

The steam turbine is typically designed for maximum attainable efficiency at a guarantee point or specific set of operating conditions. Steam turbines that are designed for API 612 special-purpose applications such as petroleum, petrochemical and natural gas industries are required to make rated power at operating combinations that provide the lowest available energy steam conditions. The turbine designs that are optimized at a guarantee point are subject to being oversized to meet the rated point conditions. This leads to oversizing various turbine components and reduces the efficiency at normal operating points. For a compressor driven by a steam turbine to meet rated conditions, the turbine must be able to produce 110% of the rated power at a steam condition coincident with the minimum inlet and maximum exhaust conditions specified.

The control stage is where the unit begins to convert this steam energy into power for the driven equipment. Control stages are typically purely impulse-style stage designs that can be velocity compounded (Curtis stage) or pressure compounded (Rateau stage) as opposed to full admission stages that may have varying amounts of reaction built into the design. A velocity-compounded stage design consists of stationary nozzles with two rows of moving blades and a reversing bucket assembly between the rotating blade rows. Stationary nozzles direct the steam against the first row of rotating blades. The steam then leaves the first row of blades still having a high velocity and enters the reversing buckets, which then redirect steam into the second row of rotating blades. The large pressure drop through the nozzle produces a high velocity steam jet. The high velocity of the steam jet is absorbed in two constant pressure steps. The two rotating rows of blades make effective use of the high-speed jet, resulting in small wheel diameters and tip speeds, fewer stages, and a shorter steam turbine for a given rating. Curtis stages are almost always used as the first stage in a steam turbine section. The high velocity steam jet, which is as much as four times the blade velocity, produces high bending stresses in blades, thus limiting blade heights. For pressure compounded staging, the heat energy of the steam is converted into work by stationary nozzles directing steam against a single row of moving blades. As in a Curtis stage, the stage pressure drop occurs entirely across the stationary nozzles. The nozzle exit velocity for a Rateau stage is approximately two times that of the blade velocity. Blade bending stresses are lower allowing for longer blades than can be used in Curtis stages. In an impulse stage, the smallest flow area is the throat at the stationary nozzle exit.

Most all mechanical drive steam turbines will have a varying arc of admission, commonly referred to as partial admission stage. As you go circumferentially around the control stage, it will be supplied steam conditions that include full, throttled or no steam supply. Because of this, the control stage is typically the least efficient stage in a steam turbine. For high efficiency designs, manufacturers often look to reduce the amount of work this stage will do. However, this provides some unique challenges. First, the inlet control stage is seeing the highest available energy set of conditions. Therefore, it will have the ability to produce the greatest amount of power. In order to reserve this energy, the stage design will look to limit the pressure ratio or pressure drop so that the more efficient full admission stages can extract more power as the steam expands further downstream. This may seem straight forward, but it can be difficult because of the sealing capabilities of the turbine split line at these elevated first stage pressures. With more modern plant process conditions, pressures and temperatures are on the rise, and a balance needs to be made based upon these casing sealing limits at a given set of pressure and temperature conditions.

It is desirable to size the control stage to have close to full admission with little throttling from the governor control valves. The throttling of a valve is primarily an isenthalpic loss to the available steam energy and has a large impact to the overall efficiency of the steam turbine. When designing the governor valve opening scheme for a multi-valve steam turbine for the normal operating point (or guarantee point), it is preferable to be on a valve point to reduce throttling losses. The valve point is when the valve is near completely open and just before the next valve is about to crack or lift from the valve seat. To meet the rated operating point, it is necessary to modify this governor valve opening schematic to ensure all valves can pass the require rated flow at minimum conditions to make this turbine rated power. This change in opening creates a throttling condition for the normal operating points thus reducing the front end efficiency. In order to try mitigate these governor valve throttling losses at normal operating points, the flow is better distributed by manipulating the area in the nozzle ring to provide appropriate area distribution that will favor a valve point during normal operation. In order to better distribute the flow, the nozzle height can be increased, which will force a lower arc of admission for the normal operating points. Additionally, the throat opening can be increased which will not only change the arc of admission but also move the velocity triangles away from optimum design. This often results in modified blade angles that better match. In both cases, this creates a larger pressure ratio on the control stage and increases inactive arc losses for the normal operating points. The larger pressure ratio produces higher blade stresses from not only the stimulus from the wakes when passing each active nozzle, but also from a significant increase in partial admission stimulus when entering and exiting this active arc, all of which require more robust staging that will reduce operating efficiency when changing from the initial optimal designed staging. This resulting increase in pressure ratio ultimately leads to producing more power on the control stage (that the design was initially targeting to reduce) to achieve high efficiency.

Once we make it past the control stage, we enter the main flow path which is most often full admission stages. To improve efficiency, the stages are designed with varying amounts of reaction. In a reaction stage, part of the total pressure drop through the stage occurs through the stationary nozzle, and part of the pressure drop occurs through the rotating blade. Unlike the impulse stage, where the controlling flow area is in the stationary nozzle throat, the reaction stage rotating blade exit area is closely controlled producing a pressure drop across the rotating blade.
This pressure drop produces a force that has two principal effects. The first is to apply force to (or push) the rotating blade to rotate providing slightly more power than from the equivalent impulse stage. The second effect is to produce a force on the stage in the downstream direction adding to thrust loading. Reaction staging produces power from both impulse and reaction effects.

The combination (or the stage designs) is considered when determining the number of pressure drops a unit will have. The more stages a unit has for a given set of conditions traditionally has lower pressure ratio per stage and higher amounts of reaction in the airfoil designs. Alternatively, less stages typically have lower reaction airfoil designs and higher pressure ratios. A balance needs to be made based upon the number of stages and the rotor dynamic considerations for overall rotor length. The more stages a turbine has, the lower the pressure drop per stage. However, this may not fit well with the varying speed range that is required for rotor dynamics. Reducing the number of stages will increase the pressure ratio per stage and the overall turbine efficiency. For a disk and diaphragm style turbine, the increase in pressure ratio on the stage will provide a large differential pressure across the stationary diaphragm. Designs must be robust enough to handle the increase in stress and deflection that this will create. Alternatively, in order to meet rotor dynamics with a large number of stages, the main shaft diameter may be increased to move the critical speed range, but this will significantly increase the rotor weight and in turn increase the bearing metal temperatures and loads. The bearing sizes are then increased to meet design limits. However, this also increases the surface velocity based upon the maximum continuous speed. The design of the unit must consider a combination of all these parameters to find the ideal balance to provide high efficiency and meet rotor dynamics, diaphragm deflection limits, bearing temperatures, load limits and surface velocities.

When designing the back-end or low pressure section of the turbine, turbine designs must consider not only the API rated case condition, but also a wide range of startup conditions. Often times the process may require startup with zero extraction flow, that is, all steam entering the front end is required to pass through the back section of the turbine. Additionally, for API rated cases, one starts with the lowest available inlet steam and reduces the amount of energy one can extract by increasing the exhaust pressure. The flow required to make rated power is substantial. A large change in flow rate can have a significant impact to the volume flow area that is needed in the condensing section of the steam turbine (LP staging). To meet the required rated point or startup case flow rate, this requires significant changes to the design of the back end stages (or LP group). For example, the last stage(s) will either need to be gauged open or increased in height to pass the increased flow requirement, both of which negatively impact the efficiency of the turbine at normal operating points. A taller height, for example, will increase centrifugal stresses and have larger bending stresses. Alternatively, gauging open the nozzle and bucket passages will greatly reduce the operating efficiency of the stage. These design considerations must be reviewed carefully to provide the optimum solution for the expected operation of the unit.

The impact each of these parameters has varies based upon the power balance in the machine. This includes designs such as straight through condensing, back pressure or extraction, and induction type turbines. The straight through turbines will be largely impacted across all design parameters which can oversize the flow requirement up to 60% above the guarantee condition. With an extraction turbine, this impact will split the performance losses in each section of the turbine based upon this power balance. When the varying extraction and induction minimum and maximum conditions are tied in, this generates front end oversizing anywhere from 10% to 30% and back end oversizing by up to 30% to 50%, which can negatively impact the performance at normal operating points by up to 5 points or more.

Another design consideration is the overall thrust of the unit. As discussed earlier, the main shaft diameter can either be increased or reduced to meet a wide range of limits. Doing so will have a very large impact to the stage thrust, and a balance piston is typically applied to balance out the large thrust. Increasing the main shaft diameter will reduce the balance piston area that is applied to offset the aerodynamic thrust, but it also reduces the disk thrust since the stage will have less disk face area. Reducing the main shaft diameter will provide a larger balance piston but can substantially increase the disk thrust. The type of staging will have an impact on the amount of aerodynamic thrust being produced with higher reaction staging increasing this aero thrust and more impulse designs having lower thrust. Thrust bearing sizes also need to balance between the surface velocity and load carry capabilities to meet bearing temperatures. Balance holes can be applied to reduce disk thrust, but they can have negative consequences to efficiency for higher reaction staging.

The Importance of Steam Quality

The best way to maximize profits in a refinery is to minimize the unplanned outages attributed to machinery failure. For steam turbines, the number one source of performance degradation and failure is poor steam quality. Boiler carryover and steam contamination can have severe adverse effects on the internal components of a steam turbine. Corrosion and pipe scale upstream of the turbine can become dislodged, be carried into the machine and impact the initial rotating row(s) of rotor blades. As the steam expands through the turbine, it will eventually fall below the superheated region for pressure and temperature and become saturated. The rotating and stationary stages of a steam turbine, located in the region of transition, will experience the most adverse effects from impurities and various oxides that can nucleate and attack the metal which can lead to cracks, fatigue and ultimate failure. Water soluble impurities (salts, acids, etc.) will nucleate on the rotating and stationary parts and will eventually reduce the flow area in the stator and rotor. Examples of this buildup can be seen in Figure 15 and Figure 16. This reduced area increases the internal pressure, thus requiring more steam to maintain the power levels. Eventually, the flow will be choked to the point that the turbine will be unable to pass sufficient steam flow to maintain the required power. Water soluble containments can be removed by “washing” the turbine with water injection into the turbine inlet. This procedure is by no means trivial, and careful consideration and planning must be done to determine the proper amount of water injection as to not overwhelm the turbine with excessive water (which in itself can damage the machine). The best way to maximize run time and mean time between maintenance for the steam turbine is to closely monitor the turbine condensate and boiler feedwater chemistry to minimize the contaminants entering the steam turbine.

Figure 15: Rotor Fouling

Figure 16: Stator Fouling

Non-Return Valves and the Impact on Steam Turbine Overspeed

Every steam turbine is designed with consideration for multiple shutdown scenarios to ensure that turbine integrity is maintained. To be compliant with API, the steam turbine must be capable of maintaining a certain percent of speed in a complete loss of coupled load, as well as an instantaneous loss of coupled load (coupling failure).

When a signal for the overspeed protection system is sent to close the trip valve, a number of factors contribute to the continued speed rise of the steam turbine:

- Rotor inertia: heavier rotors will help to resist speed increase
- Signal delay or the time it takes for the signal to reach the trip header and open the solenoid valves
- Trip valve closing time which is the response time for the trip valve to close
- The expansion of entrapped steam which will continue to deliver power to the rotor until the turbine reaches a state of equilibrium

Of these four factors, an often overlooked and significant contributor to rotor overspeed is the entrapped steam volume (Figure 17). Trip and throttle valves are typically attached directly to the steam turbine to minimize the amount of entrapped steam in the system. On an extraction or induction steam turbine, however, the non-return valves (for extraction units) or trip valve (for induction units) and any pressure relief valves are typically located in a convenient location for accessibility and maintenance. Depending on the installation, this can place the valves a considerable distance from the turbine. The steam entrapped between the valve and the turbine will be expanded through the rotor and continue to increase the speed of the rotor. In the case of a broken coupling, when the rotor has no coupled load, the expanding steam can add considerable speed to the rotor before windage losses begin to decay the speed. The turbine manufacturer can estimate a total allowable amount of entrapped steam that can be tolerated for a particular unit. This information can be shared with the purchaser to assist in the plant layout and location of various safety valves.

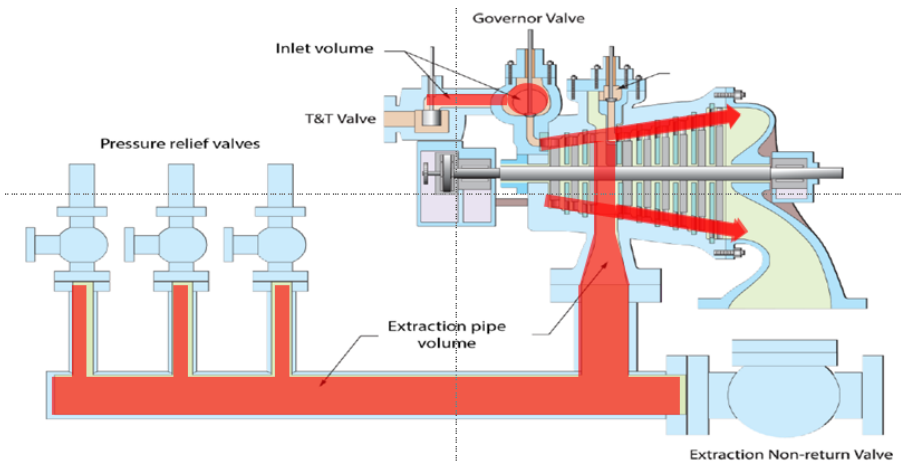

Figure 17: Entrapped Steam Volume

OPERATIONAL, DESIGN, AND APPLICATIONS ISSUES OF TURBOMACHINERY IN ETHYLENE PLANTS

Operational issues of turbomachinery in the chemical process industries include fouling, erosion, vibration, overheating, surging, loss of control, and other problems. To some extent, the operational issues are mitigated through careful selection and design of the turbomachinery and their ancillary systems.

Compressor Selection and Configuration

Design and selection of the compressor string begins with the customer requirements, and these usually include gas composition, flow rate, inlet and discharge conditions. The starting point of the compressor selection is typically the amount of flow required. In general, large compressors are required to handle large flows. However, there are some methods for minimizing the compressor size such as operating at a very high speed or using a high flow coefficient and very high flow coefficient wheels (Jariwala, et al., 2021). Iterative compressor selections are made in an effort to maximize the efficiency and range while ensuring reliability and minimizing cost.

The compressor type (straight through, sideload, iso-cooled, etc.) is decided by the process. The chemical process industry often requires multiple sections (or stages) of compression to improve the efficiency of their process, and a single compressor body can often handle more than one section/stage of compression. Figure 18 shows a single side load multi-section compressor used in ethylene refrigeration. Each section will have an anti-surge system to assist with keeping that section out of surge similar to Figure 19. A map for each section of compression is provided for purposes of control. Figure 20 shows a map of the first section. Operational limits are set by surge +10% on the leftmost part of each curve and by stonewall on the rightmost part of each curve. Compressor operation is controlled by inlet throttling, adjustable inlet guide vanes, or speed variation.

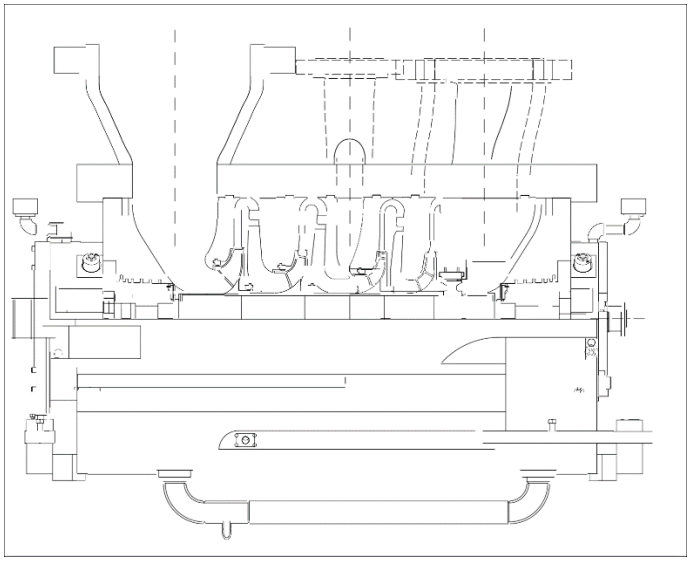

Figure 18: Multi-section Centrifugal Compressor

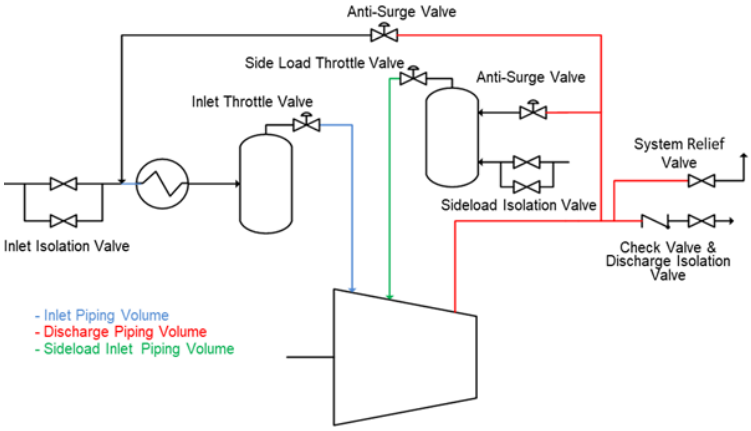

Figure 19: Anti-surge Recycle Loop

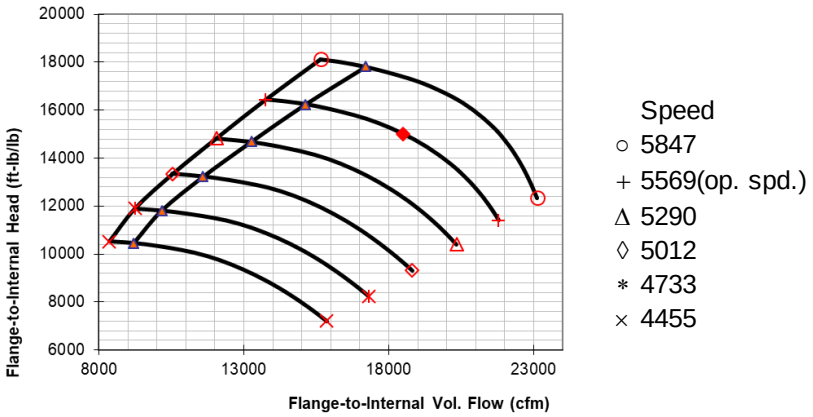

Figure 20: Compressor Map, Section 1

Driver Selection

Once the compressor is selected, the driver can be selected to match. Quite often, the driver type is known in advance, but the speed and power requirements are unknown until the compressor is selected. In ethylene plants, the driver of choice is the steam turbine due to the availability of high pressure steam that is generated from heat recovered from the process, which is exothermic. PDH plants do not have the sufficient waste heat for steam generation, and the driver of choice is typically a large motor or gas turbine. One of the difficulties with motor selection is that the torque during startup can get extremely high as the pressure ratio develops across the compressor, and this can require either an oversized motor, a VFD for startup, or venting the system pressure down such that startup can be achieved.

Lateral Rotordynamics

Chemical plant operators often target six to ten years of operation between service intervals. One of the key parameters that effects long term operation is the lateral vibration level of the equipment. Lateral vibration is of such importance that nearly all critical service turbomachinery applications apply a vibration monitoring system to identify dangerous levels.

The main causes of lateral vibration are unbalance, misalignment, and instability. The primary methods for ensuring acceptable vibration are to eliminate sources of excitation such as unbalance and misalignment and to desensitize the rotor to sources of excitation through proper design and rotordynamic analysis. Rotordynamic requirements are set by API standards and include achieving separation margin from critical speeds and achieving required logarithmic decrement stability values. Separation margins from lateral natural frequencies are largely determined by rotor sizing, bearing selection and coupling selection. Logarithmic decrement stability is dependent on the same parameters, primarily the rotor sizing, which determines the critical speed ratio (operating speed/critical speed on stiff supports) and the bearing selection. High gas density, which is an important stability risk factor, is generally not seen in petrochemical applications. Design options such as hole pattern seals or squeeze film dampers are available to improve rotordynamic stability, but these are seldom required for chemical and petrochemical applications.

Steam turbines are readily applied as drivers in many chemical plant applications. A wide continuous operating speed range is typically specified for steam turbine driven applications and this provides certain advantages with respect to equipment operability. These applications have the challenge of needing to depress the first critical speed well below the minimum allowable speed while requiring the second critical speed to be well above the maximum continuous speed and above the trip speed of the equipment. Figure 21 shows an example of an extraction steam turbine rotor-bearing system with an unbalance response plot. There are good separation margins from the continuous operating speed range, which are the result of engineering decisions such as shaft diameter adjustment, bearing selection, and sometimes even stage selection to accommodate the steam turbine extraction, which requires longer axial space. During startup, the steam turbine will hold at a series of speeds that are below the first critical speed for the purpose of warmup then ramp quickly through the first critical speed and into the continuous operating speed range.

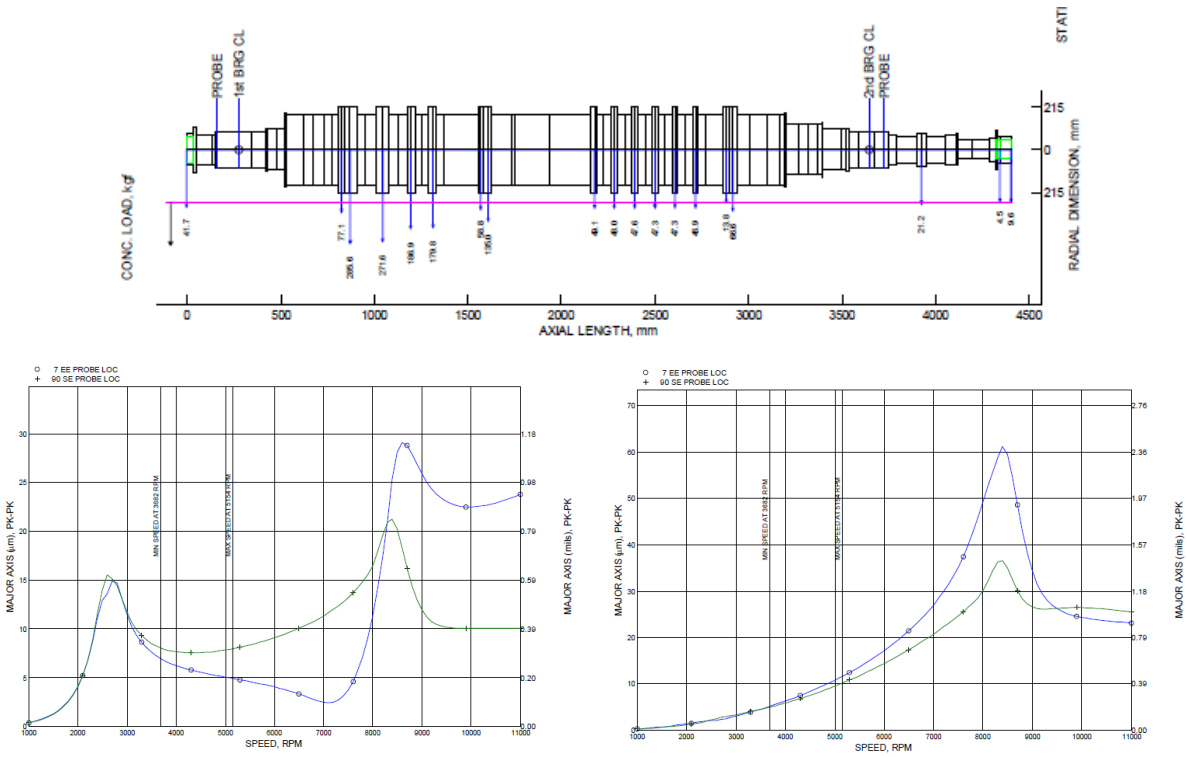

Figure 21: Extraction Turbine Cross-section and Unbalance Response Plots

Centrifugal compressor rotordynamics are heavily dependent on the aerodynamic path. Most compressor aerodynamicists prefer a small shaft diameter and long stage space for purposes of aerodynamic efficiency, but this combination results in a long bearing span and depressed first critical speed that can quickly create rotordynamic problems. Most OEMs offer a series of aerodynamic stage solutions to solve problems such that the required compression can be performed in a small number of compressor bodies. For example, most propane and propylene compressors run fairly slow and can be operated with a small shaft diameter with small bore impellers, whereas the ethylene refrigeration string typically runs at high speed and requires a larger shaft diameter with large bore impellers. Rotordynamic problems can be fairly easy to avoid provided there are sufficient stage options for compressor selection. Figure 22 shows an unbalance response plot for an ethylene/propylene compressor.

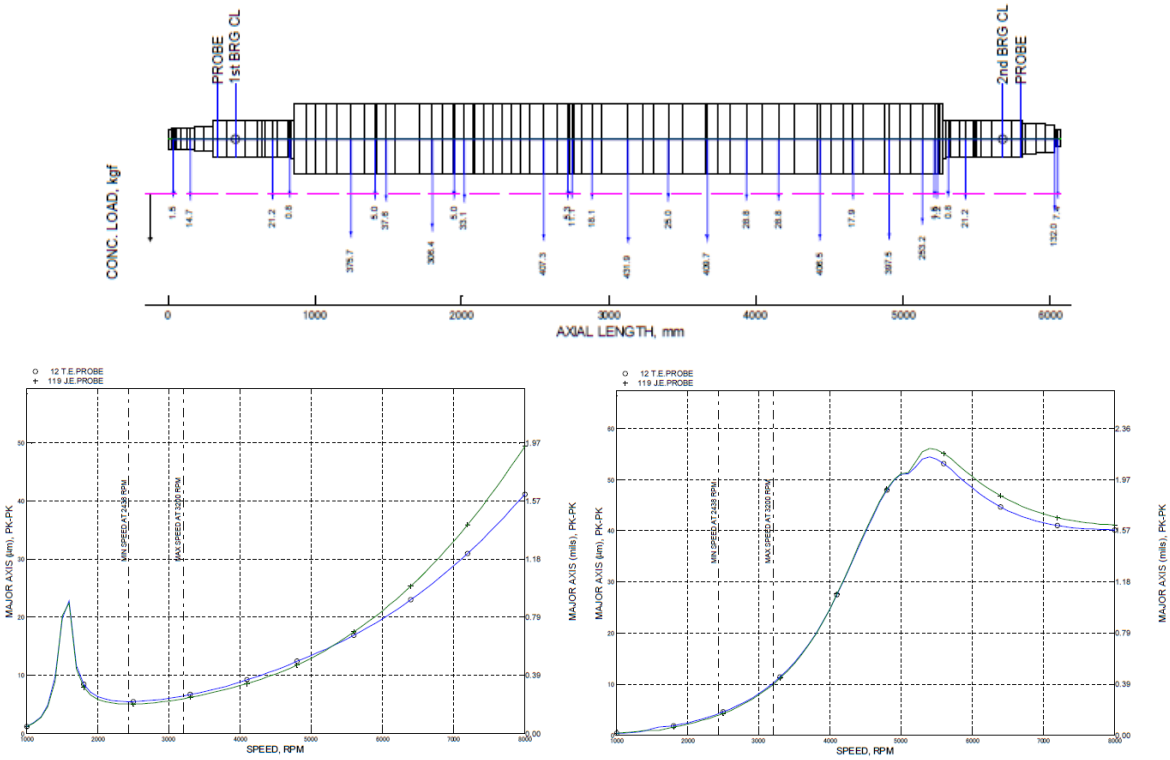

Figure 22: Compressor Mass-elastic Drawing and Unbalance Response Plots

Torsional Rotordynamics

Torsional rotordynamic concerns are heavily dependent on driver selection for the compressors. In the case of steam and gas turbines, there is very little torsional excitation. Turbine direct drive compressor strings do not experience torsional problems, and torsional analysis of such strings is simply optional per the 8th edition of API 617. Motors on the other hand are well known to produce torsional excitation especially during on-line startup and fault events. Synchronous motors can be particularly abusive during on-line startup. Variable frequency drives (VFDs) smooth out motor startup transients and are used to add variable speed flexibility to motors, but they also add further complication to torsional rotordynamics due to their potential for generating torsional excitation at the motor over a greater number of frequencies including broadband excitation and also potential for feedback instability. When applying large motors, the synchronous motor has a distinct advantage over the induction motor due to its better efficiency and better power factor.

Achieving acceptable torsional rotordynamics is essentially an exercise in keeping torsional stresses below threshold values. Nearly all machinery trains lack a torsional measurement system. Therefore, the avoidance of torsional rotordynamic problems is primarily dependent upon a proper torsional analysis and system design. Requirements generally include achieving API separation margins from torsional natural frequencies via coupling selection and tuning and properly sizing components to handle imposed stresses.

An example case is described for a synchronous motor – gear – compressor string for PDH service (Figure 23). The synchronous motor is rated at 26.11 MW (35,000 HP) having a rated torque of 138459 N-m (102122 ft-lbs) and starting on a 14.4 kV bus. Being a single speed string, separation margins were easy to achieve. However, high torques were predicted and a resilient elastomeric damper style coupling was required between the motor and gear. Shaft ends were resized larger as compared to the initial selection. Figure 24 shows the final predicted pinion and compressor shaft end torques that occur during direct on-line start. The second natural frequency is excited at 12 seconds, and the first natural frequency is excited just after 16 seconds. The final solution was analytically acceptable. The string was started and has been successfully operating for well over five years.

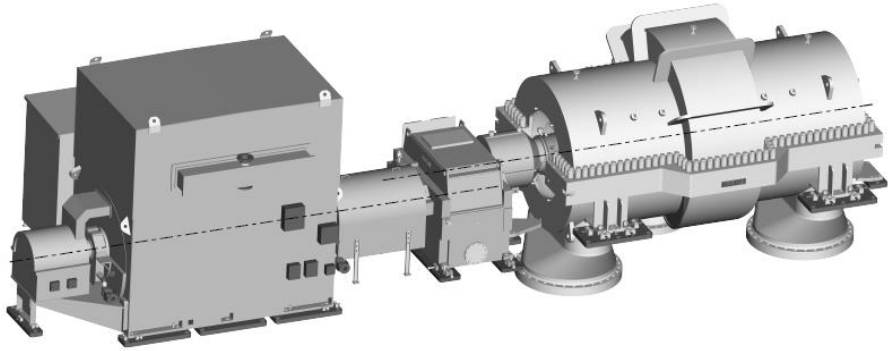

Figure 23: Synchronous Motor - Gear - Compressor String

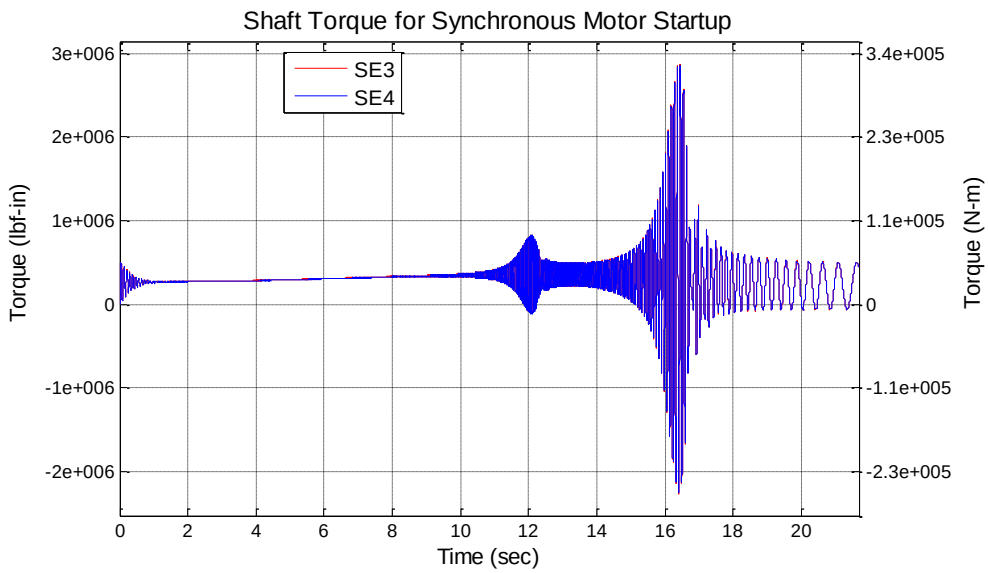

Figure 24: Synchronous Motor Startup Transient Torque at the Compressor Shaft End

MATERIALS AND COATINGS ISSUES FOR CENTRIFUGAL COMPRESSORS IN ETHYLENE PLANTS

Centrifugal compressors utilized in ethylene, cracked gas, refrigeration and PDH services face a number of challenges that must be accounted for in the selection of the materials for each of the critical components. API 617 includes the basic design criteria that must be applied and references ASME Boiler and Pressure Vessel Code Section XIII Division I for basic guidelines of the pressure-containing components. Compressors must also account for low temperature consideration and meet the Minimum Design Metal Temperature (MDMT). Many applications also contain corrosive process gas conditions, specifically in regards to Hydrogen Sulfide (H2S) which can cause stress-corrosion cracking if a susceptible material is utilized. Many processes can also experience a build-up of foulant on the flowpath of the compressor which can decrease efficiency and lead to vibration increases during service. In these cases, coatings can be applied to the aerodynamic flowpath surfaces to minimize the amount of adhered foulant and allow the foulant to be more easily removed through online washing procedures.

Low Temperature Considerations

Carbon steels, low alloy steels and stainless steels are utilized for the compressor casings. The suitability of different steels for various temperatures is dictated by the microstructure of each grade. Carbon steels have a ferritic microstructure which is the result of atoms that are arranged in a body-centered cubic (BCC) structure (Figure 25).

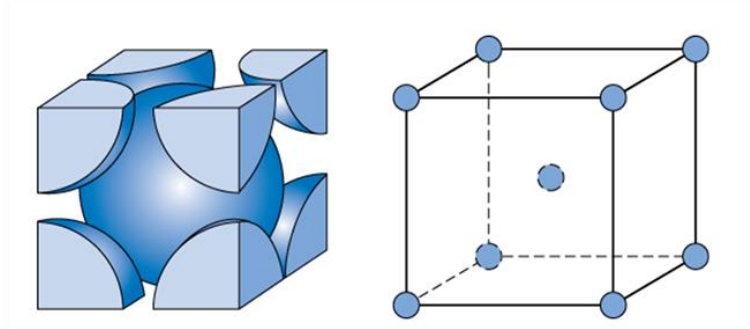

Figure 25: Illustration of a Body Centered Cubic Structure (Redwing)

This arrangement allows for very good ductility of a material based upon the "layers" of atoms sliding past each other, referred to as a slip system as seen in Figure 26.

There are many different slip systems available, but they are thermally activated in BCC steels. As the temperature decreases, less slip systems are available and a material will go through a ductile-to-brittle transition over a small temperature range of approximately 10°C. The temperature which the material switches from failing in a ductile manner to a brittle manner is called the ductile-to-brittle transition temperature (Figure 27).

This transition will occur for every BCC steel, regardless of the steel cleanliness and heat treated condition. The ductile behavior of carbon steel without alloy additions can go to slightly below -46°C, which is why API sets the limit for carbon steels at this temperature. The addition of nickel to the steel will help to push this ductile-to-brittle transition temperature to lower temperatures. The reason this works is that nickel acts as an austenite stabilizer within the steel. The austenitic microstructure is formed from atoms that are arranged in a Face Centered Cubic (FCC) microstructure (Figure 28). The slip systems in this microstructure arrangement are always present and are not thermally activated, which allows materials with this microstructure to retain toughness at temperatures down to -196°C.

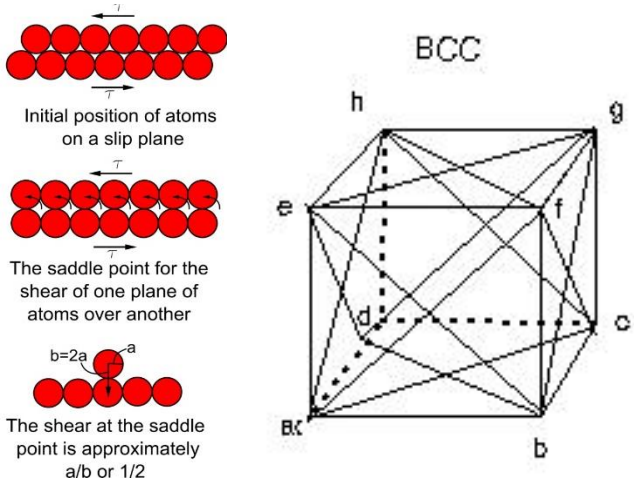

Figure 26: Illustration of Slip Systems in a Body-centered Cubic Structure (Carter, et al. 1991)

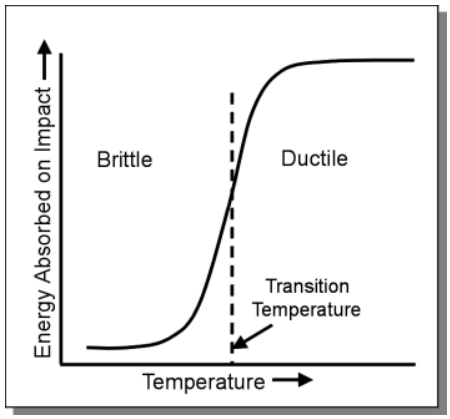

Figure 27: Graph Showing Ductile to Brittle Transition Curve of BCC Metals (University of New South Wales)

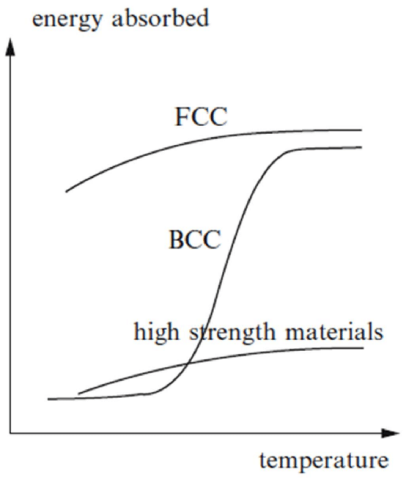

Figure 28: Comparison of Impact Energy vs. Temperature for FCC and BCC Structures (Lydman, 2016)

The toughness of a steel or any metallic material is typically measured through the use of a Charpy V-Notch Impact Test shown in Figure 29. The ASTM standard for this test is per ASTM E23, titled "Standard Test Methods for Notched Bar Impact Testing of Metallic Materials." This specification defines the impact sample geometry, including specific details regarding a notch that is machined in the sample and the equipment used to perform the testing. The samples are exposed to a defined temperature for a minimum of five minutes and are then taken out of the bath and broken with the anvil of the impact tester (Figure 30). The impact energy is a measure of the amount of energy needed to fracture the impact sample. This is recorded in foot pounds (ft-lbs) or Joules (J). There are other measures regarding the toughness of a material which can be determined from an impact test, but this paper will focus on the impact energy.

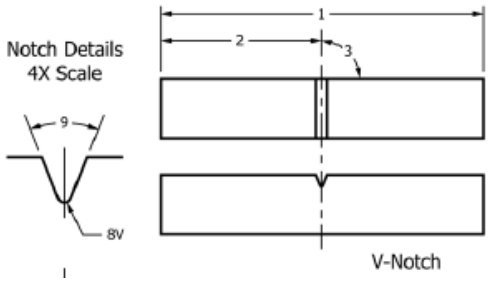

Figure 29: Charpy V-Notch Impact Sample (ASTM E23)

Figure 30: Impact Tester

The amount of nickel that is added to the carbon steel influences how low of a temperature is reached for the ductile-to-brittle transition temperature. Steel alloys with 2.5% nickel can be rated for temperatures as low as -75°C, alloys with 3.5% nickel are commonly utilized to -101°C, and 9% nickel steels can be used at cryogenic temperatures. It should be noted that the temperatures listed above are not hardened absolute values, but rather temperatures in which the alloy has been proven to retain adequate toughness. The 3.5% nickel steels are the most commonly utilized grades for compressor casings which have an MDMT between -46°C and -101°C. When the MDMT temperature is below -101°C, the material utilized is often an austenitic stainless steel such as 304L (UNS S30403) or 316L (UNS S31603). These stainless steels contain at least 8% nickel, which is sufficient to stabilize a fully austenitic microstructure at temperatures down to -196°C and explains why the toughness of austenitic stainless steels remains high even at cryogenic temperatures. The austenitic stainless steels are significantly more expensive in comparison to nickel alloy steels, however, they are necessary due to the MDMT requirements. They are readily available and are suitable for centrifugal compressor casing fabrication.

The rotating components of the compressor must also take into account the minimum temperature requirements on the compressor. The compressor shaft material is typically manufactured from 4340 low alloy steel (UNS G43400) in the quench and temper conditions which will meet impact testing requirements at -46°C (-50°F). By lowering the carbon content of the shaft material, the material can meet impact testing at -101°C (-150°F) in the same quench and tempered condition. This material will have a reduced tensile strength because of the lower carbon content which must be accounted for in the design of the compressor. Impellers can be manufactured from the same low alloy steel as the compressor shaft. Stainless steel materials can also be utilized for the impeller materials. Martensitic stainless steel such as 13% Cr – 4% nickel steel (UNS S42400) can be used to meet impact temperatures at -115°C (-175°F) when quenched and double tempered. For temperatures down to -196°C (-320°F), Inconel 625, Inconel 718 or 9% nickel steel materials are used.

Corrosion Considerations

The process gas on centrifugal compressors may contain any number of process gas constituents which may be corrosive to carbon steel. Many constituents can create a condition which increases the general corrosion rate where a corrosion scale can be built up on the surface. Although this can be minimized through utilizing a stainless steel material or a nickel-based alloy, this is not always a practical or cost-effective solution. Compressor casings may be 100 mm to 150 mm thick in most cases, and using a stainless material can be very expensive. In these cases, a stainless steel or nickel-based alloy may be overlaid on the internal surface of the casing through the use of a weldment, which offers corrosion protection on the surface while still allowing for a carbon steel casing to be used (Figure 31). This overlay can be applied to the entire surface or at selected locations such as at the O-ring grooves (Figure 32).

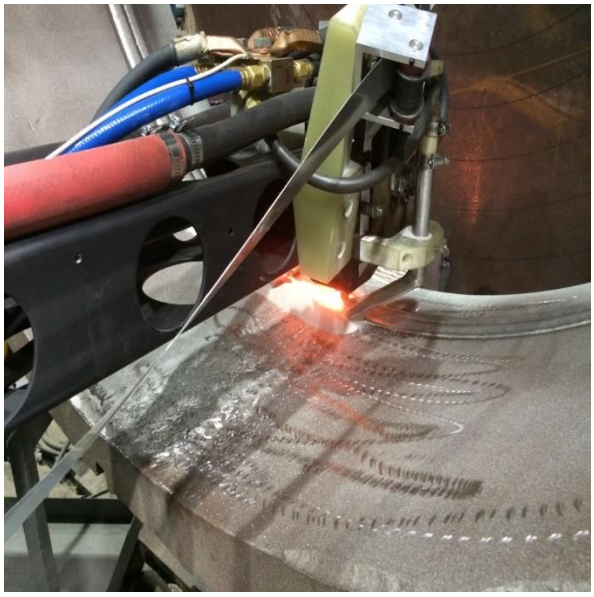

Figure 31: Cladding of a Nickel-based Alloy over a Carbon Steel Substrate

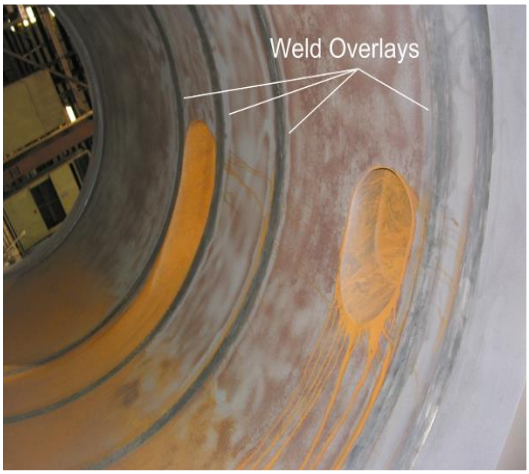

Figure 32: Vertically Split Compressor Casing with Stainless Steel Weld Overlays at O-ring Groove Locations (Shown after a 6-year Operation under Corrosive Conditions)

Hydrogen Sulfide Conditions

Hydrogen sulfide (H2S) can be present in many cracked gas compressors which can lead to sulfide-induced stress corrosion cracking (Figure 33). This mechanism is dangerous as it can occur at localized locations and create a crack that propagates through the thickness of the material, remaining unnoticed until there is a catastrophic failure. Luckily, this can be prevented by ensuring that a material is not in a susceptible condition to allow sulfide induced stress corrosion cracking to occur.

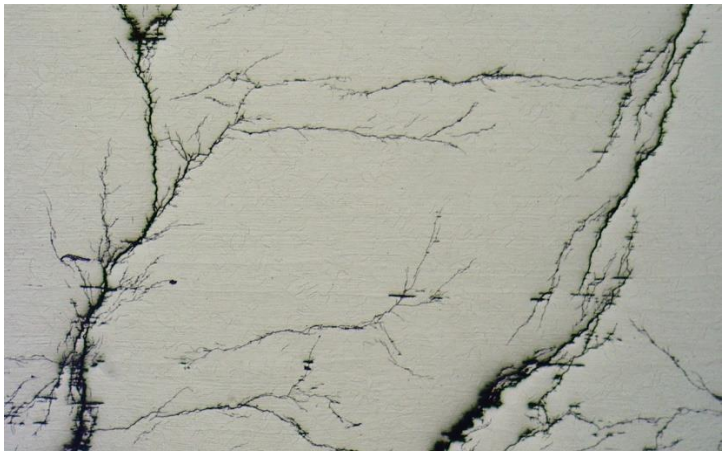

Figure 33: Photomicrograph of Stress Corrosion Cracking

NACE MR0103 provides guidelines for materials that can be used along with the heat treated condition of the material that must be applied to avoid the potential for stress corrosion cracking. Carbon steel materials should be in a normalized condition with a hardness below 200 BHN, and this is a condition easily achieved in standard compressor casings manufactured from ASTM A516 Grade 60 or Grade 70 material. Weldments used for fabricating the casing must receive a Post-Weld Heat Treatment (PWHT) at a minimum temperature of 1150˚F (621˚C) and maintain a maximum hardness of 238 HV in the Heat Affected Zone (HAZ) of the weldment. The welding of materials for use in hydrogen sulfide environments is provided by NACE SP0472 (which is referenced in NACE MR0103).

The rotating components of the centrifugal compressor, including the shaft and the impellers, face additional challenges in meeting the requirements for hydrogen sulfide service. These components utilize low alloy steel or martensitic stainless steel due to the higher yield strengths needed in these components because of the applied stress (Figure 34). The same alloying additions and heat treatments that make these alloys strong can also make them more susceptible to stress corrosion cracking. AISI 4140 steel can be used in a quench and tempered condition for centrifugal compressor impellers, however, the maximum hardness is limited to 22 HRC. Stainless steels, which are often utilized for compressor impellers, include a 13% Cr – 4% Ni (UNS S42400) and 17-4 PH stainless steel. The UNS S42400 must be in a double tempered condition with a maximum hardness of 23 HRC, while the 17-4 PH stainless steel is in a solution treated and double-aged condition with a maximum hardness of 33 HRC. The 17-4 PH stainless steel has the highest allowable strength of any iron-based steel that is acceptable for service in H2S conditions and is often utilized because it allows for the highest rotational speeds under these conditions.

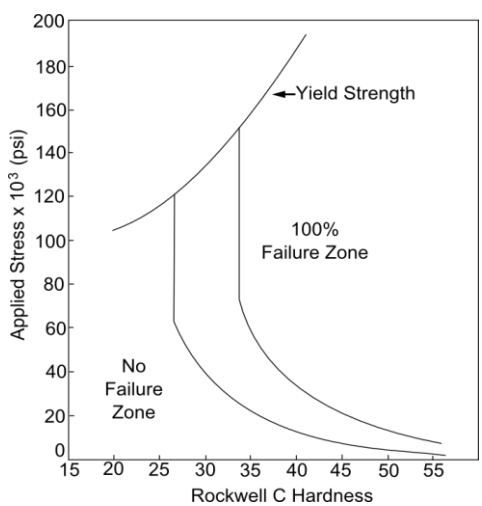

Figure 34: Threshold Stress Limits for Sulfide Induced Stress Corrosion Cracking

The compressor shafts are typically manufactured from 4340 low alloy steel (UNS G43400) in a quench and tempered condition and will typically have a hardness that exceeds the maximum allowable hardness per NACE MR0103. It can be used successfully for the compressor shafts as the applied stress in the main body of the compressor shaft is often extremely low, below 10 ksi (68.9 MPa), in most applications. The high strength of the shaft is needed at the coupling location which is located outside of the compressor body and is not exposed to the hydrogen sulfide in the process gas.

Anti-Fouling Coatings

Corrosion and fouling of centrifugal compressors during operation are major concerns for process operators within the petrochemical industry. Corrosion and its effects are readily visible and well understood, and in most circumstances, can be minimized by selecting a base material or welding overlay that is suitable for the process gas application. Fouling is more process dependent as it is normally the result of a polymerization reaction intrinsic to the compression process or a carryover of a contaminant into the compressor. Over time, fouling leads to the buildup of solids on the compressor's internal surfaces, which limits the flow through the compressor and can alter the compressor's aerodynamics. It can also reduce efficiency over time, increase vibration, and result in an unplanned shutdown.

Centrifugal compressor operators try to minimize fouling within the compressor through process control and injections. Polymerization in many hydrocarbon services has been reported starting at temperatures above 90°C (Chow, et al. 1995). While this does not occur in all applications, the compressor should be designed to keep the process temperature low throughout. Liquid injections of oil or water assist in maintaining a lower process temperature, and anti-polymerization additives can be added to the process as well. Process systems also attempt to keep contaminants from being carried over into the compressor.

Despite all of these preventative efforts, fouling still occurs in many hydrocarbon compressors. To help minimize the effects of foulant buildup, anti-fouling coatings can be applied to the components which make up the aerodynamic flow path of the compressor.

Organic Topcoat Systems

The first successful anti-fouling coatings applied to centrifugal compressors used the compound polytetrafluoroethylene, more commonly known as PTFE or Teflon®. PTFE was widely used in numerous industrial and commercial applications because of its excellent "nonstick" properties. These nonstick properties also provided an effective anti-fouling coating, but required the Teflon to be mixed with a resin binder to allow it to adhere to the complicated geometries of a centrifugal compressor flow path (Wang, et al. 2003). An aluminum-filled chromate-phosphate ceramic coating is applied directly to the base materials of the compressor aerodynamic flow path to provide corrosion protection in case the topcoat is compromised. A prerequisite of any effective anti-fouling coating is that it must be a corrosion-resistant coating.

This layered anti-fouling coating system was developed in the late 1980s and is still used today in specific applications. A common example of this type of coating, shown in Figure 35, has a base layer that is an aluminum-filled chromate phosphate coating, an intermediate coating that is a protective primer, and a PTFE-filled resin topcoat (Figure 36). Each layer is applied by a spray process and requires a separate heat cure afterwards. Coating application equipment that can reach inside the narrow internal passageways of an impeller or diaphragm is used, and specially designed furnaces are necessary to avoid distortion of the compressor rotors during the heat curing cycle. This type of coating system has a proven history of use in hydrocarbon compressors. Various efforts have been made by compressor OEMs and aftermarket service providers to improve upon these coating systems, however, the same coating structure has been applied with attempts to improve the anti-fouling characteristics of the topcoat.

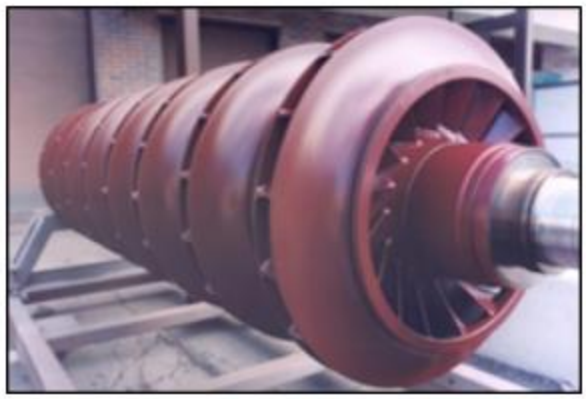

Figure 35: Centrifugal Compressor Coating with an Organic Topcoat

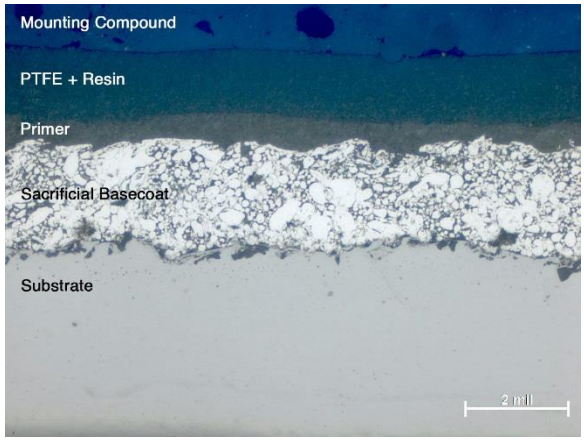

Figure 35: Cross-sectional Photomicrograph of Organic Topcoat System

Electroless Nickel Coating

In order to improve upon the durability of the organic topcoat systems, electroless nickel has been applied to compressor components (Figure 37). Electroless nickel applies a nickel-phosphorus glass to the surface of the components being treated. Besides its anti-fouling benefits, this coating system has numerous advantages in terms of durability. The metallic glass coating has a hardness of over 40 HRC, which makes it more durable than the compressor impeller base metal, allowing the coating to withstand liquid injections. The amorphous nickel coating is relatively chemical resistant to many process gas environments and chemical applications. Although the coating is metallic, there are no grain boundaries, so the coating is not susceptible to inter-granular corrosion. The electroless nickel performs very well in the presence of hydrogen sulfide, and it can become even more corrosion resistant as a thin, tenacious layer of nickel sulfide forms at the surface, which is extremely effective at blocking additional corrosion reactions. By blocking corrosion and providing an anti-fouling surface, this coating makes the liquid injections in the compressor extremely effective in removing foulant buildup in the compressor. The coating is applied by a submersion process where the nickel-phosphorus reacts directly with the base material. This application process forms an extremely strong chemical bond and allows for application to complicated geometries with narrow tip openings (Figure 38).

Figure 36: Rotor Coated with Electroless Nickel after 6 Years of Operation in Cracked Gas Service

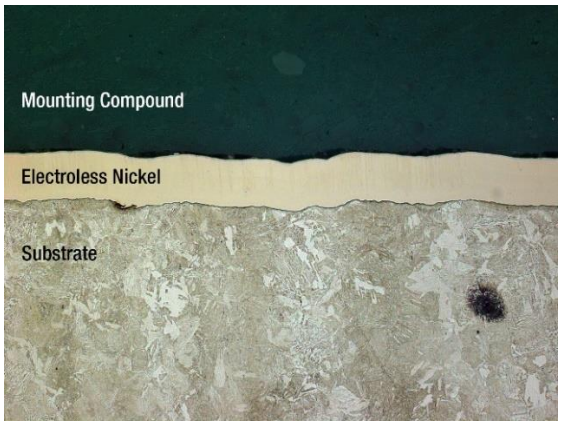

Figure 37: Cross-sectional Photomicrograph of Pos-E-Coat 523 System

Measuring Anti-Fouling Benefits of Centrifugal Compressor Coatings in Hydrocarbon Service

Centrifugal compressor operators in hydrocarbon services need to know the benefits of applying an anti-fouling coating, which is information they can use to justify the cost of applying the coating. Measuring the anti-fouling benefits of a coating within a laboratory is challenging as it is not possible to simulate the exact operating conditions inside of a hydrocarbon compressor. Every centrifugal compressor has a different process gas composition and temperature, the amount of liquids injected can vary significantly, and chemical injections differ at each site where they are used.

One method of providing a relative ranking is to compare the foulant release abilities of the various coatings against a standard hydrocarbon foulant. The first step in the testing process is to apply a substance that can form an imitation foulant that mimics the foulant formed in hydrocarbon compressors. Elliott created and applied a proprietary imitation foulant (Figure 38) to a bare steel sample, as well as to coated samples, and baked the samples in a curing oven until a thick tar-like foulant formed on the surfaces. Each sample was then placed in a test rig that scrubbed the sample against a soft pad, and the amount of foulant removed was measured by weight at set intervals (Figure 39). The bare steel samples did not release the imitation foulant after 2,000 cycles, which demonstrates the standard problem in hydrocarbon compressors where efficiency cannot be increased regardless of the number of liquid injections intended to clean the compressor. This testing helps to demonstrate the significant anti-fouling benefits these coatings can provide.

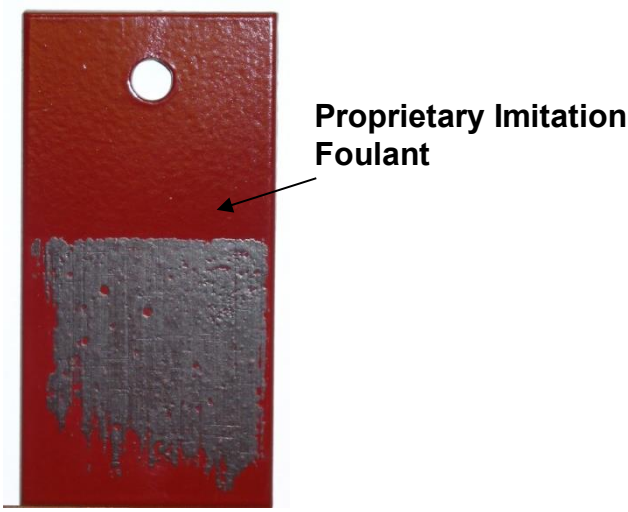

Figure 38: Steel Sample Coated with Proprietary Simulated Foulant used to Test Coating Fouling Release

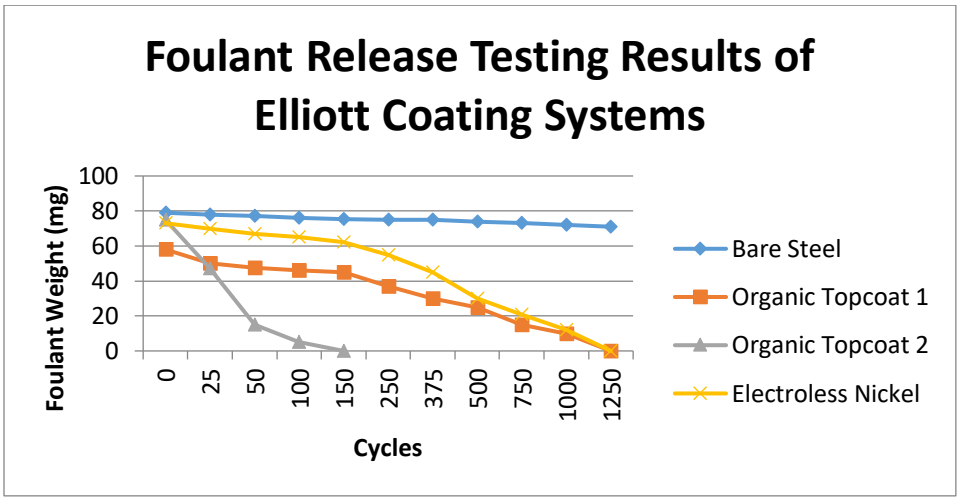

Figure 39: Fouling Release Testing Results for Elliott Coating Systems

The petrochemical industry faces various compressor fouling challenges, and each operating condition is unique. Compressor coatings are available that can improve resistance to corrosive environments and improve foulant release abilities. Selection of the appropriate coating for the specific process conditions will help extend compressor service life and maintain optimum operational efficiency.

SUMMARY

Plastics manufacturing, which is part of the petrochemical industry, produces polymer materials, often called plastics, and is a major user of rotating machinery. Modern plastic manufacturing processes, such as ethylene plants, utilize a wide range of turbomachinery that must flexibly operate under harsh fluid conditions with long life and minimal maintenance downtime. Most of the critical, complex, and high power turbomachinery in the plastic making processes reside within the refinery and ethylene plants. Thus, the design, function, applications, and operation of compressors, expanders, and steam turbines in the plastics industry was provided with an emphasis on critical equipment in ethylene plants. A basic understanding of the processes as well as the type, power requirements, utilities, and material challenges of operating turbomachines in ethylene plants was also discussed. In ethylene service, the fluids pose unique aerodynamic, material, and structural design challenges including wet gas service, fouling, high gas path temperatures, and corrosive, flammable, and sometimes toxic service. These requirements make the design, application and operation of turbomachines in ethylene plants highly complex and challenging. Within an ethylene plant, the three most critical and high power turbomachinery applications are cracker feed gas, ethylene refrigeration, and propylene refrigeration compression. These compression trains are usually driven by steam turbines since steam is readily available. There are many other pieces of rotating machinery in an ethylene plant such as pumps, plant air compressors, and liquid/gas expanders, but by far the highest power demand and most important machinery are the three above mentioned compressor trains. The design, function, and operation of these three turbomachinery trains, as well as some other key compressor applications, were discussed in detail. Topics covered in this tutorial thus included: ethylene and propylene process fundamentals, turbomachines in polymer process applications, design conditions, operational considerations, and compressor rotordynamic and materials issues in the plastic industry service.

REFERENCES

ASTM E23, 2018, “Standard Test Methods for Notched Bar Impact Testing of Metallic Materials,” ASTM International.

Brun, K., Pettinato, B., Ross, S., Snively, S., Kurz, R., & Thorp, J, 2019, “TT12-Turbomachinery for Refinery Applications,” Proceedings of the 48th Turbomachinery Symposium. Turbomachinery Laboratory, Texas A&M Engineering Experiment Station.

Bryson, E.J., and Dickert E.J., 1977, "ETHYLENE PLANT TURBOMACHINERY," Hydrocarbon Processing, Vol. 56, No. 11.

Carter, Giles F. and Paul, Donald E., 1991, “Materials Science and Engineering,” ASM International, pp. 69.

Chow, R., Mcmordie, B., Weigand, R., 1995, “New Coatings Extend Compressor Service Life,” Hydrocarbon Processing, 72-74.

“ECONOMIC IMPACTS AND MARKET CHALLENGES FOR THE METHANE TO DERIVATIVES PETROCHEMICAL SUB-SECTOR”, Canadian Energy Research Research Institute, Study 169, March 2018.

Fabrega, F. M., J. S. Rossi, and J. V. H. d'Angelo, 2010, "Exergetic analysis of the refrigeration system in ethylene and propylene production process," Energy, 35.3, 1224-1231.

Jariwala, V., Chundru, R., and Pettinato, B., 2021, “Development and Application of Very High Flow Covered Stages for Process Centrifugal Compressors,” Proceedings of the Second Asia Turbomachinery Symposium, Turbomachinery Laboratory, Texas A&M University, College Station, TX.

Jariwala, V., 2020, “Design of very-high-flow coefficient centrifugal compressor stages,” Hydrocarbon Processing, pp. 57-61.

Lydman, Jari, 2016, “Impact toughness and microstructure characterization of thermally aged Allooy 52 narrow-gap dissimilar metal weld,” https://www.researchgate.net/figure/Ductile-to-brittle-transition-type-curve-behaviour-for-BCC-FCC-and-highstrength_fig24_312895036.

Maddah, H. A., 2018, “A Comparative Study between Propane Dehydrogenation (PDH) Technologies and Plants in Saudi Arabia,” American Scientific Research Journal for Engineering, Technology, and Sciences, 45(1), pp. 49-63.

Quershi, V., Singh R., Chate, V., 2020, “Engineering propylene: Value unlocking with the PDH Process,” Hydrocarbon Processing, pp. 33-35.

Redwing, Ronald, “Materials in Today’s World – Lesson 5: Structure and Applications of Metals,” John A. Dutton e-Education Institute, The Pennsylvania State University, https://www.e-education.psu.edu/matse81/node/2132.

Ross, S., Harvey, S., Braman, C., 2020, “On-Purpose Propylene Production,” Hydrocarbon Engineering, pp 41-44.

Stanley, R. A. and Bohannan, W. R., 1977, “Dynamic Simulation of Centrifugal Compressor Systems,” Proceedings of the Sixth Turbomachinery Symposium, Turbomachinery Laboratory, Texas A&M University, College Station, TX. https://doi.org/10.21423/R14Q14.

University of New South Wales, “Temperature of Impact,” Sydney, Australia, https://www.materials.unsw.edu.au/study-us/high-school-students-and-teachers/online-tutorials/materials-testing/impact-testing/temperature-impact.

Wang, W., Dowson, P., Baha, A., 2003, “Development of Antifouling and Corrosion Resistant Coatings for Petrochemical Compressors,” 32nd Turbomachinery Symposium, Houston, TX.