48TH TURBOMACHINERY & 35TH PUMP SYMPOSIA
HOUSTON, TEXAS | SEPTEMBER 9-12, 2019
GEORGE R. BROWN CONVENTION CENTER

TURBOMACHINERY FOR REFINERY APPLICATIONS

Klaus Brun, Ph.D.
Director, Research & Development
Elliott Group
Jeannette, Pennsylvania, USA

Brian Pettinato
Manager, Product Development, R&D
Elliott Group
Jeannette, Pennsylvania, USA

Stephen Ross
Manager, Compressor Development, R&D
Elliott Group
Jeannette, Pennsylvania, USA

Sam Snively
Manager, Turbine Development, R&D
Elliott Group
Jeannette, Pennsylvania, USA

Dr. Rainer Kurz
Manager
Solar Turbines, Inc.
San Diego, California, USA

Joseph Thorp
Senior Director of Technology
Saudi Aramco Energy Ventures, North America
Houston, Texas, USA

Dr. Brun is the Director of Research & Development at Elliott Group where he leads a group of over 60 professionals in the development of turbomachinery and related systems for the energy industry. His past experience includes positions in product development, engineering, project management, and executive management at Southwest Research Institute, Solar Turbines, General Electric, and Alstom. He holds nine patents, authored over 350 papers, and published three textbooks on energy systems and turbomachinery. Dr. Brun is a Fellow of the ASME and won an R&D 100 award in 2007 for his Semi-Active Valve invention. He also won the ASME Industrial Gas Turbine Award in 2016 and 11 individuals ASME Turbo Expo Best Paper awards. Dr. Brun is the chair if the 2020 Supercritical CO2 Power Cycles Symposium, past chair of the ASME-IGTI Board of Directors, the ASME Oil & Gas Applications Committee, and ASME sCO2 Power Cycle Committee. He is also a member of the API 616 Task Force, the ASME PTC-10 task force, the Asia Turbomachinery Symposiums Committee, and the Supercritical CO2 Symposium Advisory Committee. Dr. Brun is currently the Executive Correspondent of Turbomachinery International Magazine and Associate Editor of the ASME Journal of Gas Turbines for Power

Brian Pettinato is Manager of Product Development at Elliott Group in Jeannette, Pennsylvania. He has been with Elliott Group since 1995. His primary area of expertise is machinery dynamics. Prior to joining Elliott Group, he worked as a project engineer for CentriMarc. Mr. Pettinato received his B.S. (1989) and M.S. (1992) Mechanical Engineering degrees from the University of Virginia. He has coauthored over twenty technical papers and holds three U.S. patents. Mr. Pettinato is a fellow member of ASME, a member of STLE, and a registered Professional Engineer in the State of Pennsylvania. He serves on the Turbomachinery Advisory Committee of Texas A&M and on the API 684 rotordynamics task force.

Mr. Ross is Manager of Compressor Development in the Research & Development Department at Elliott Group. He has 38 year of compressor experience including positions in technical services (field support) and centrifugal compressor design at Elliott Group and Ingersoll-Rand. He presented at the Turbomachinery Symposium in 1991, 2002, 2003, and 2014. He has a BSME from The Pennsylvania State University, is a registered mechanical engineer in the state of Pennsylvania, and a member of ASME.

Copyright© 2019 by Turbomachinery Laboratory, Texas A&M Engineering Experiment Station

Mr. Snively is the Manager for Steam Turbine Development at Elliott Group where he leads a team of 14 engineers, aerodynamicists, and designers on the enhancement of Elliott's steam turbine technologies. In his 21 year career at Elliott Group, he has held various design and engineering positions in Engineered Products for steam turbines, centrifugal compressors, hot gas expanders, and axial compressors. Prior to his management position in Research and Development, he was the Engineering and Design Manager for steam turbines, axial compressors, and hot gas expanders in Engineered Products with responsibility for core applications, technical programming, product engineering, and design. He is also a member of the API-612 task force for Special Purpose Steam Turbines.

Dr. Rainer Kurz is the Manager, Systems Analysis, at Solar Turbines Incorporated in San Diego, California. His organization is responsible for analyzing compression requirements, predicting compressor and gas turbine performance, for conducting application studies, and for field performance testing. Dr. Kurz attended the Universitaet der Bundeswehr in Hamburg, Germany, where he received the degree of a Dr.-Ing. in 1991. He has authored numerous publications about turbomachinery related topics, is an ASME fellow, holds 2 patents, and is a member of the Turbomachinery Symposium Advisory Committee.

Joseph Thorp is Sr. Director of Technology for Saudi Aramco Energy Ventures –North America. He has successfully specified and deployed approximately $ 3 Billion (USD) of technology solutions on some of Aramco's most strategically important projects, pilots and commercial deployments. Mr. Thorp is current Chairman of the American Petroleum Institute's 1200 member Committee on Refinery Equipment (CRE) which is responsible for publishing the most referenced Oil & Gas Standards in the world. He serves on the Board of Form Energy, Xage Security and Foghorn Systems. Mr. Thorp is Director of Oil & Gas for the Prognostics and Health Management (PHM) Society, an Advisory Committee Member of Michigan State University's Department of Mechanical Engineering, a Fellow in ASME and a licensed Professional Engineer in the State of Texas. He also holds an MBA in Finance & Economics.

ABSTRACT

This tutorial covers the basics, applications, and operation of compressors, expanders, steam turbines, and gas turbines in refinery applications. Modern refineries utilize a wide range of turbomachinery that must flexibly operate under harsh, fluid conditions with long life and minimal maintenance downtime. In refinery service, the fluids pose unique aerodynamic, materials, and structural design challenges including wet gas service, high gas path temperatures, and corrosive, flammable, and sometimes toxic service. These requirements make the design, packaging, controls, application, and operation of turbomachines in refineries highly complex and challenging. Operational and technical details of turbine and compression applications such as gas boost, refrigeration, hydrogen recycle, blow gas compression, coke gas compression, reformer recycle compression, steam turbine drivers, and gas turbine drivers will be discussed for refinery processes including alkylation, reforming, hydrocracking, fluid cracking, power generation, and gas boost. Topics cover refinery process fundamentals, turbomachines in refinery applications, design conditions, and -examples of special operational considerations in refinery service. A basic understanding of the processes as well as the type, power requirements, utilities, and application challenges of operating turbomachines in refineries is provided.

INTRODUCTION – Refinery Function

A petroleum refinery is an industrial process plant where crude oil is transformed and refined into more useful products such as petroleum naphtha, gasoline, diesel fuel, asphalt base, heating oil, kerosene, liquefied petroleum gas, jet fuel and fuel oils. Petroleum refineries are generally large industrial complexes that involve many different processing units, machinery, and auxiliary facilities such as utility units and storage tanks. Each refinery has its own unique arrangement and combination of refining processes largely determined by the refinery location, desired products and economic considerations. An oil refinery is considered an essential part of the downstream side of the petroleum industry. Some modern petroleum refineries process as much as 800,000 to 900,000 barrels (127,000 to 143,000 cubic meters) of crude oil per day.

Raw or unprocessed crude oil is not generally useful in industrial applications so it must be refined into consumer and industrial products for transportation, heating, and chemical processing. Oil can be used in a variety of ways because it contains hydrocarbons of varying molecular masses, forms and lengths such as paraffins, aromatics, naphthenes (or cycloalkanes), alkenes, dienes, and alkynes. While the molecules in crude oil include different atoms such as sulfur and nitrogen, the hydrocarbons are the most common form of molecules, which are molecules of varying lengths and complexity made of hydrogen and carbon atoms, and a small number of oxygen atoms. The

differences in the structure of these molecules account for their varying physical and chemical properties, and it is this variety that makes crude oil useful in a broad range of several applications. Petroleum products are usually grouped into four categories: light distillates (LPG, gasoline, naphtha), middle distillates (kerosene, jet fuel, diesel), heavy distillates and residuum (heavy fuel oil, lubricating oils, wax, asphalt). These require blending various feedstocks, mixing appropriate additives, providing short term storage, and preparation for bulk loading to trucks, barges, product ships, and railcars. This classification is based on the way crude oil is distilled and separated into fractions. Major refinery products, their uses, and their basic physical properties are shown in Table 1.

Petroleum Gas - used for heating, cooking, making plastics
• small alkanes (1 to 4 carbon atoms)
• commonly known by the names methane, ethane, propane, butane
• boiling range = less than 104 degrees Fahrenheit / 40 degrees Celsius
• often liquified under pressure to create LPG (liquified petroleum gas)
Naphtha or Ligroin - intermediate that will be further processed to make gasoline
• mix of 5 to 9 carbon atom alkanes
• boiling range = 140 to 212 degrees Fahrenheit / 60 to 100 degrees Celsius
Gasoline - motor fuel
• liquid
• mix of alkanes and cycloalkanes (5 to 12 carbon atoms)
• boiling range = 104 to 401 degrees Fahrenheit / 40 to 205 degrees Celsius
Kerosene - fuel for jet engines and tractors; starting material for making other products
• liquid
• mix of alkanes (10 to 18 carbons) and aromatics
• boiling range = 350 to 617 degrees Fahrenheit / 175 to 325 degrees Celsius
Gas Oil or Diesel Distillate - used for diesel fuel and heating oil; starting material for other products
• liquid
• alkanes containing 12 or more carbon atoms
• boiling range = 482 to 662 degrees Fahrenheit / 250 to 350 degrees Celsius
Lubricating Oil - used for motor oil, grease, other lubricants
• liquid
• long chain (20 to 50 carbon atoms) alkanes, cycloalkanes, aromatics
• boiling range = 572 to 700 degrees Fahrenheit / 300 to 370 degrees Celsius
Heavy Gas or Fuel Oil - used for industrial fuel; starting material for making other products
• liquid
• long chain (20 to 70 carbon atoms) alkanes, cycloalkanes, aromatics
• boiling range = 700 to 1112 degrees Fahrenheit / 370 to 600 degrees Celsius
Residuals - coke, asphalt, tar, waxes; starting material for making other products
• solid
• multiple-ringed compounds with 70 or more carbon atoms
• boiling range = greater than 1112 degrees Fahrenheit / 600 degrees Celsius

Table 1: Refinery Products

From a physical chemistry perspective a refinery includes three types of fundamental hydrocarbon molecular chain transformation processes:

Cracking

Cracking is the breaking of large hydrocarbon chains. There are two basic varieties of cracking:

- Thermal including steam, vis-breaking, and coking
- Catalytic including fluid and hydrocracking

Alkylation

Alkylation is the altering of molecular structure.

Reforming

Reforming, almost always catalytic reforming, is the combining of molecular chains to form longer chains.

Although many products are derived in a refinery, a typical barrel oil crude oil converts into approximately 40-45% gasoline, 2-6% propane, 15-25% heating oil & diesel, 1-3% asphalt, 10-15% jet fuels, and 15-25% others (lube oil, waxes, plastics, etc.). This is obviously very much dependent on the type and the quality of the starting crude oil and the specific refinery processes.

Figure 1 shows a flow diagram of a typical refinery including the many chemical transformation process. The crude oil distillation unit or distillation column is the first processing unit, and traditionally the most important, in virtually all petroleum refineries. It distills the incoming crude oil into various fractions of different boiling ranges, each of which are then processed further in the other refinery processing units. The distillation unit is often referred to as the atmospheric distillation unit because it operates at slightly above atmospheric pressure.

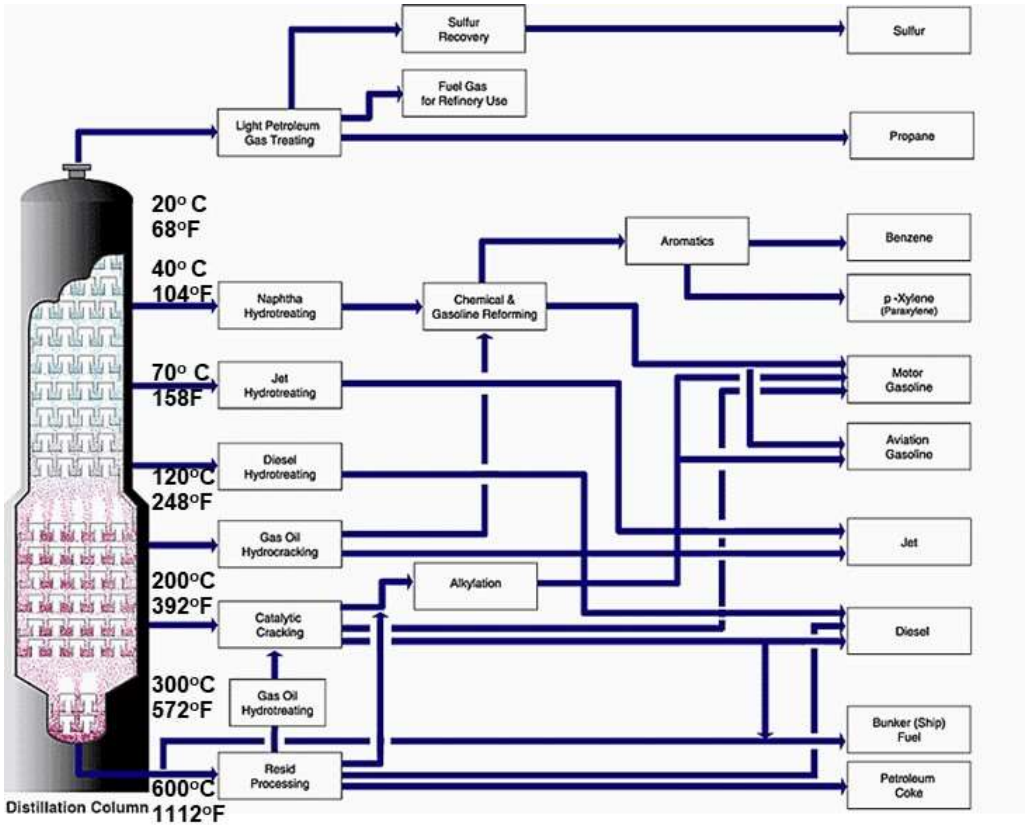

Figure 1: Typical Refinery Process with Distillation Column

Other critical refinery processes include:

<u>Hydrotreating</u>
Hydrotreating is an established refinery process for reducing sulfur, nitrogen and aromatics while enhancing cetane/octane number, density, and smoke point. In the hydrotreating process, oil fractions are reacted with hydrogen in the presence of a catalyst to produce high-value clean products. For the production of e.g. ultra-low-sulfur diesel (temperatures usually range between 350 and 390°C, pressures between 60 and 90 bara). The heart of every hydrotreating process is the reactor section, which features a high-pressure reactor vessel, proprietary catalyst and reactor internals technology.

<u>Hydrocracking</u>
During hydrocracking, complex organic molecules such as kerogens or heavy hydrocarbons are broken down into simpler molecules by the breaking of carbon-carbon bonds in the precursors. The hydrocracking process depends on the nature and quality of the feedstock and the relative rates of the two competing reactions, hydrogenation and cracking. Heavy aromatic feedstock is converted into lighter products under a wide range of high pressures (70 bara/1'000 psia -140 bara/2'000 psia) and fairly high temperatures (400°C/750°F- 800°C/1'500°F), in the presence of hydrogen and special catalysts.

<u>Isomerization</u>
Isomerization is the process by which molecules are transformed into other molecules which have exactly the same atoms, but the atoms have a different arrangement e.g. A-8-C instead of 8-A-C (these related molecules are known as isomers). In refining light naphtha, such as butane C4 or pentane C5, hydrogen is cycled through the isomerization reactors at high temperature and pressures to increase the octane/cetane rating.

Reforming

Catalytic reforming is a chemical process used to convert heavier naphtha (typically having low octane ratings) into high-octane liquid products called reformates. The process converts low-octane linear hydrocarbons (paraffins) into branched alkanes (isoparaffins) and cyclic naphthenes, which are then partially dehydrogenated to produce high-octane aromatic hydrocarbons. The dehydrogenation also produces significant amounts of byproduct hydrogen gas, which is fed into other refinery processes such as hydrocracking. During catalytic reforming the catalytic reformer hydrogen recycle compressors circulates the hydrogen at 5 -45 bara through a set of heaters and catalytic reactors.

INTRODUCTION – Turbomachinery in Refineries

There are a large number of turbomachinery applications in refineries ranging from pumping and compression to mechanical drivers and power generation. The wide range of critical machinery applications in a refinery are shown in Figure 2 on a typical refinery process diagram.

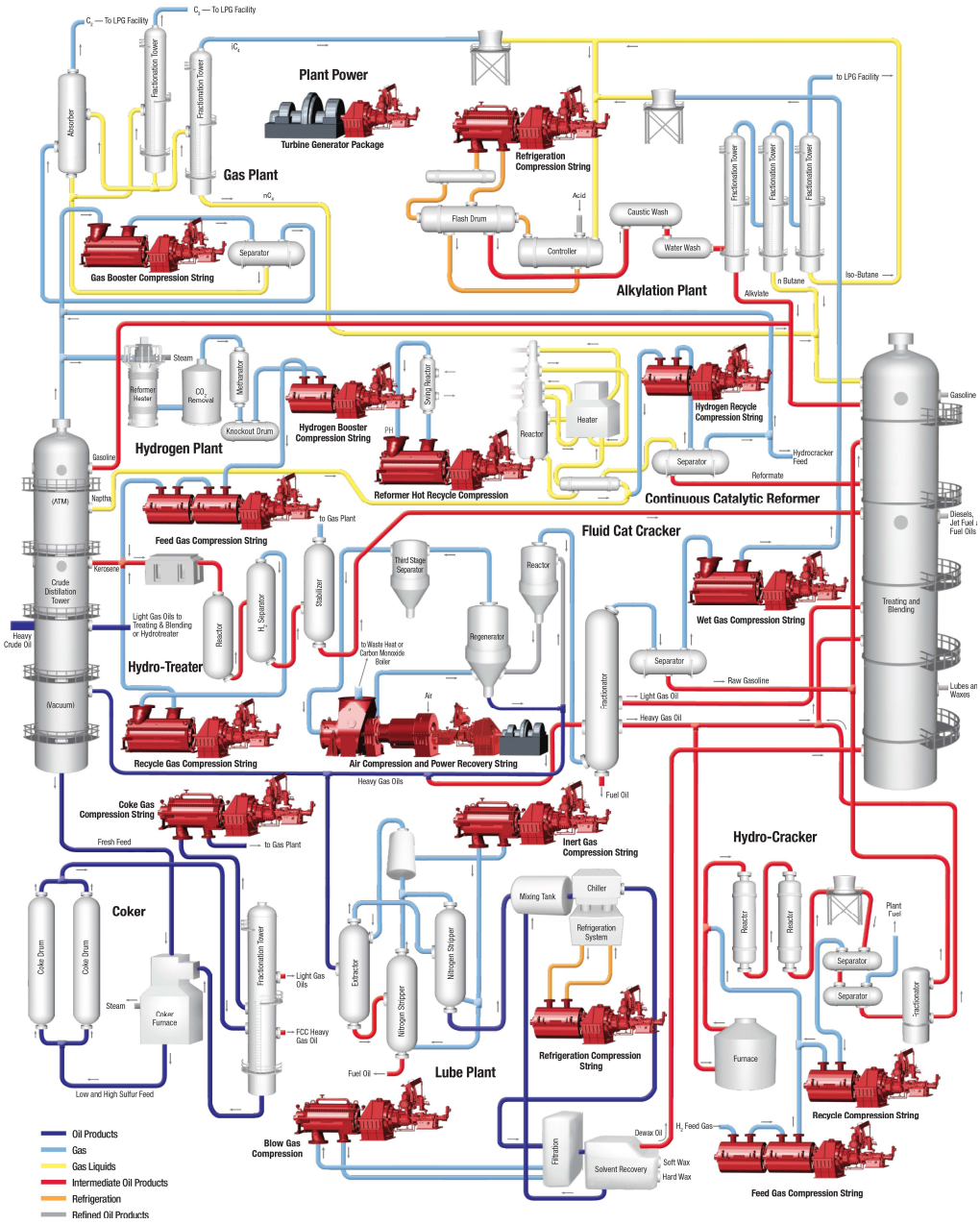

Figure 2: Turbomachinery Applications in Refinery Service

For completeness sake, Table 2 shows a near complete list of machinery used in refinery service.

Isomerization
H2, H2 Rich Make up and Recycle compressors.
Products: Centrifugal or reciprocating compressors
Alkylation
Reactor H2 feed compressor.
Products: Centrifugal or reciprocating compressors
H2/HGU Hydrogen Generation Unit
Feed gas into the plant and then feed the produced hydrogen to other process units. API & ATEX, dry gas compression solutions.
Products: Centrifugal or reciprocating compressors
H2 /SMR Steam Methane Reformer
Force Draught and Induced Draught fans.
Products: Centrifugal Fans
H2/TGTU Tail gas treatment unit
Within a PSA hydrogen recovery plant i-gas is compressed and fed into vessels with adsorbent materials which selectively adsorbs impurities. Pure hydrogen exits the top of the adsorber. There are multiple vessels either active or being regenerated to ensure continuous recovery. Tail gas (low pressure gas with impurities) is processed through a compressor typically to the fuel gas system.
Products: Centrifugal or reciprocating compressors, Oil Injected Screw Compressor, Oil Free Screw Compressor
HDT Hydro Treatment Uni, HDS Hydro Desulfurization Units
Feedstock containing sulfur is fed to reactors where hydrogen and catalyst break out impurities. The reactor effluent is cooled and separated with the hydrogen rich gas treated with amine to remove hydrogen sulfide before being compressed and recycled to the process. Additional hydrogen is added to the cycle via a make-up compressor. A further compressor processes the gas vented from the stripper section.
Products: Reciprocating Compressor, Centrifugal compressor, Screw Oil Injected Compressor, Screw Oil Free Compressor
Acid gas plant SRU Sulfur Recovery Unit furnace
Equipments boost supply air into the combustion furnace within the thermal stage of a Claus process.
Products: Centrifugal Fan, Single stage blowers
Naththa and Distillate treatments. Desulphurization. Main air blower
The blower provides combustion air into the furnace to generate heat, against a typical back pressure of 0.8 Bar.
Products: Single stage blowers
CDU Crude Distillation Unit - offgas (vent gas, tail gas, overhead)
The crude feedstock goes through a process of pre-heating, desalting and dehydrating, then heating and flashing the crude in the distillation column/ tower. The gas from off the top of the tower passes through a reflux drum to separate out any water and the gas is then compressed for transfer to the acid gas removal unit for sulfur treatment. Compress process gas from the distillation tower overhead.
Products: Oil Injected Screw Compressor, Oil Free Screw Compressors
Dewaxing. H2 Make up and recycle compressors
Dewaxing is a process used in the production of lube oil and carried out using a solvent based or catalytic method. Catalytic dewaxing involves cracking of n-paraffins and compressed hydrogen is used to prevent coking.
Products: Centrifugal or reciprocating compressors
Dewaxing refrigeration system compressor
Dewaxing is a process used in the production of lube oil and carried out using a solvent based or catalytic method. Solvent dewaxing involves the refrigeration of lube stock and solvent as it passes through tubes that have a rotating scraper. A mechanical refrigeration system will require compressors. Compressors are used to process the refrigerant(Propane/ Propylene) or in a catalytic system to recycle hydrogen.
Products: Oil Free Screw Compressor, Oil Injected Screw Compressor
CR Catalytic Reforming CCR Continuous Catalytic Reforming units. Regeneration and Net gas compressor
Reactor catalysts deteriorate over time and are regenerated by use of circulating gas via a regeneration gas compressor (also termed recycle). Hydrogen is a by-product of the reforming process and is compressed after the separator for recovery by a net/rich gas compressor.
Products: Oil Free Screw Compressor, Oil Injected Screw Compressor, Centrifugal or reciprocating compressors
Site utilities. Air regeneration unit
Air blowers.
Products: Single stage blowers
Delayed Coker – wet gas
Overhead vapors from the drums flow to a fractionator (combination tower) which separates out gases, gasoline, diesel, heavy coker gas oil and recycles them. Pressure is controlled by a wet gas compressor processing the overhead gases from the tower.
Products: Centrifugal or reciprocating compressors , Oil Free Screw Compressor
FCC Fluid Catalytic Cracking - wet gas
CC Fluid Catalytic Cracking for Heavy and residue treatments. Vapors or wet gases from the reactor main column overhead are passed to the vapor recovery unit within the FCC where they are compressed by the Wet Gas Compressor (WGC) before being transferred to the high-pressure condenser/ receiver within the refinery gas concentration unit/ plant.
Products: Centrifugal or reciprocating compressors, Oil Free Screw Compressor
Heavy and residue treatments. Visbreaking
Products: Centrifugal or reciprocating compressors
VDU – vacuum/ overhead gas compressor
VDU Vacuum Distillation Unit. Residues from the CDU are heated in a vacuum furnace and then flashed in a VDU column with products being drawn from the column at the top, side and bottom for further processing. The gas (overhead vapors) existing the tower at the top passes to a vacuum system. The vacuum system has an overhead accumulator which separates liquid and vapors. The vapors may be compressed by a compressor or booster blowers.
Products: Centrifugal or reciprocating compressors , Oil Free Screw Compressor
Site utilities/N2 service
Delivery of pressurized nitrogen for site process needs. Dry compression ensure gas purity preservation.
Products: Centrifugal or reciprocating compressors, Vertical Reciprocating, Diaphragm Compressor
Site utilities/Ventilation & Aeration
At emergency evacuation points, axial and centrifugal provide reliable ventilation in crisis situations.
Products: Centrifugal fans, Axial fans
Site utilities/Air instrument compressors
Delivery of pressurized air for site process needs. Dry compression ensure gas purity preservation.
Products: Reciprocating Compressor, Vertical Reciprocating, Diaphragm Compressor
Site utilities/Electricity-Fuel gas
Onsite power is often generated using gas turbines. Modern turbines have increasing high pressure feed gas requirements designed to optimize power output. As available gas pressure is commonly lower than required it is boosted through a compressor prior to the turbine combustion chamber.
Products: Oil Injected Screw Compressor, Oil Free Screw Compressor, Centrifugal or reciprocating compressors
Site utilities/WWTP Waste water treatment
Treating contaminants such are petroleum hydrocarbons, ammonia, and organic sulfur. For mechanical system or diffused aeration system, air supply is needed into the diffuser.
Products: Single stage blowers
Site utilities/Cooling towers
Cooling fans for mechanical draught cooling towers.
Products: Cooling fans
Site utilities/Air-cooled heat exchangers
Fans for air-cooled heat exchangers.
Products: Cooling fans
Site utilities/Air-cooled condensers
Fans for air-cooled condensers.
Products: Cooling fans
Site utilities/Ventilation & Aeration
At emergency evacuation points, axial and centrifugal provide reliable ventilation in crisis situations. Living quarters overpressure to protect rooms and staircases from hazardous fumes.
Products: Centrifugal fans, Axial fans
Process Support/Flare gas recovery
Various units within the refinery system will emit vapors which will be routed to the blowdown system/ Fuel Gas Recovery Unit. The gas is separated out from any remaining hydrocarbons and is compressed to the fuel gas system.
Products: Oil Free Screw Compressor, Centrifugal or reciprocating compressors
Process Support/Extractions from capacities and reactors
Furnace and fired heater fans. Residual gas exhaust. Explosive gas exhaust (ATEX fans). Maintain safe environment free from the risk of explosive and hazardous gases. Safety-critical airlocks throughout the plant (Ability to quickly change large volumes of air).
Products: Centrifugal Fans
Process Support/H2 recovery
Products: Centrifugal or reciprocating compressors
Process Support/Tank VRU Vapor recovery
During storage, light hydrocarbons dissolved in the crude oil or condensate vaporize. Compression systems are used to recover the vented gas and reduce venting to atmosphere or flaring.
Products: Oil Injected Screw Compressor, Oil Free Screw Compressor, Centrifugal or reciprocating compressors
Process Support/Fired Heater furnace. FID Furnace
Fans for fired heater furnace. FID Furnace.
Products: Centrifugal Fans
Process Support/Incineration
General furnace applications for combustion of waste gas.
Products: Multi-Lobe Blowers
Process Support/H2
Process H2 compressors.
Products: Single Shaft Multistage Vertically Split

Table 2: Machinery in Refinery Applications

It is clearly beyond the scope of this tutorial to cover all of the applications shown in Table 2 so the focus will be on processes that require complex and large turbomachinery trains. These include:

Hydroprocessing

Hydroprocessing encompasses a variety of thermal conversion processes in which hydrogen is used, along with a catalyst, to convert petroleum fractions and products to meet the refiner's objectives. These conversion processes include hydro-desulfurization (hydrotreating) and hydrocracking. In both processes, hydrogen compressors purify the product stream by removing contaminants such as sulfur, nitrogen, and aromatic hydrocarbons. The end products typically include gasoline, jet fuel, diesel fuel, and kerosene. Because of the severe processing conditions and the high pressures required to convert petroleum fractions and products, these compressors are nearly always vertically split designs for high-pressure, high-temperature applications. Figure 3 shows a typical hydrotreater unit.

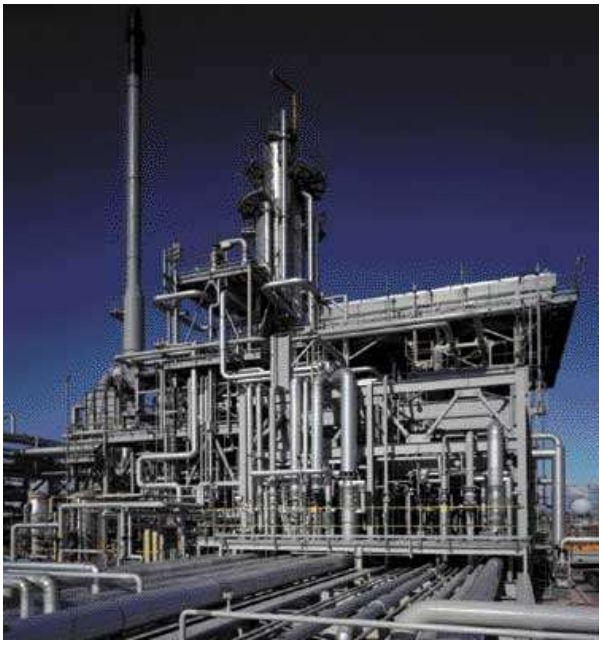

Figure 3: Hydrotreater Unit Grangemouth, UK

Typical hydrotreater centrifugal compressor trains included back-to-back or tandem configurations with side-load streams. Operating pressures range between 100-500 psia suction to a wide range of discharge pressures depending on the process. Pressures as high as 8000 psia are possible. Figure 4 sows a typical hydrotreater compressor and design.

Figure 4: Hydrotreater Compressor

Fluid Catalytic Cracking – Power Recovery

Energy represents the single largest operating expense within a refinery and in some cases, can account for nearly 50% of the total operating cost. Many refiners benefit from energy cost savings through the use of power recovery expanders. These units utilize the energy in high-temperature, low-pressure gas streams to drive generators and/or centrifugal or axial compressors in fluid catalytic cracking service. High efficiency axial compressors are often incorporated into power recovery trains. The high-flow capacity of axial compressors makes them suitable for larger, more efficient processes and they can be used to supply air to the regenerator and other plant needs. Figure 5 shows a schematic of a fluid catalytic cracking unit.

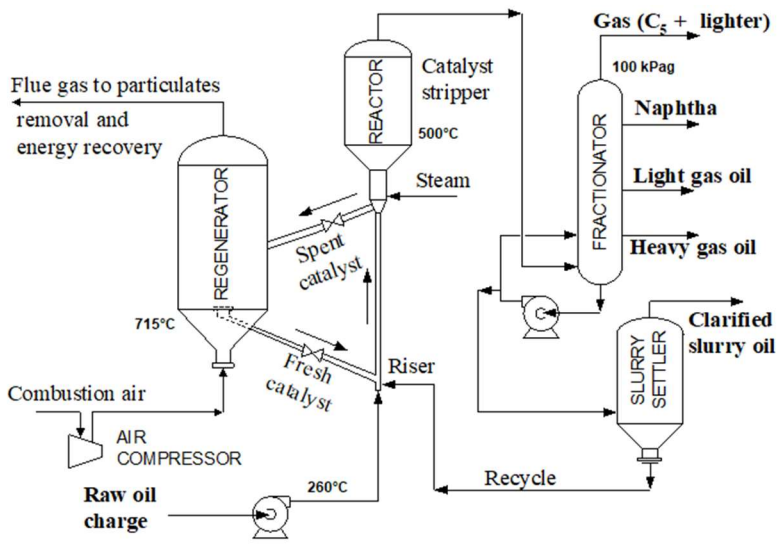

Figure 5: Fluid Catalytic Cracking Unit Process Diagram

Catalytic Reforming

The objective of catalytic reforming is to convert low octane naphtha into a high octane reformate and/or to provide aromatics (benzene, toluene, and xylene) for petrochemical plants. Reforming also produces high purity hydrogen for hydrotreating purposes. Applications include net gas and hydrogen recycle services. Hydrogen recycle compressors usually require an alternate nitrogen operating case for catalyst regeneration and must be carefully evaluated for safe operating range and for temperature limits. Figure 6 shows a hydrogen recycle compressor in reforming service driven by a multi-valve steam turbine. There are several service application ranging from mid-pressure (<1000 psia) to high pressure (>4000 psia).

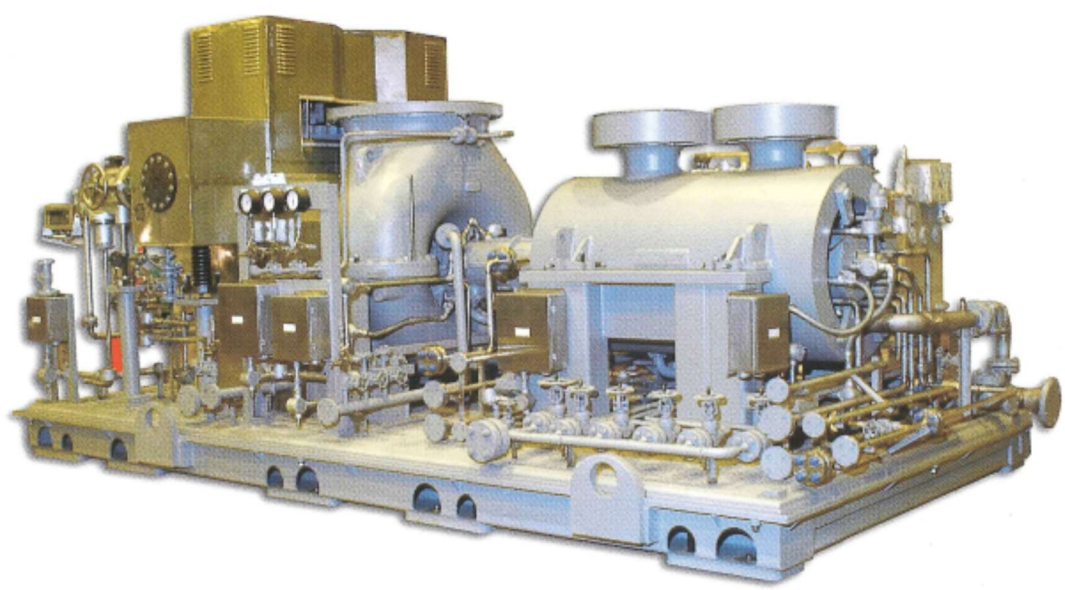

Figure 6: Vertically Split Hydrogen Recycle Compressor Driven by Steam Turbine

Delayed Coking

Delayed coking is a thermal cracking process that upgrades and converts petroleum bottoms into liquid and gas product streams and petroleum coke. Coker applications are challenging due to the wide range of operating conditions required and the fouling properties of the compressed gases. Wet gas compressors for coker service are utilized. These compressors usually require anti-fouling coatings to minimize foulant build-up on the aerodynamic surfaces of the compressor. Foulant build-up can increase rotor vibration, constrict process gas passageways, decrease efficiency, and reduce output. This is discussed in significant detail later herein. A schematic of a delayed coker is shown in Figure 7.

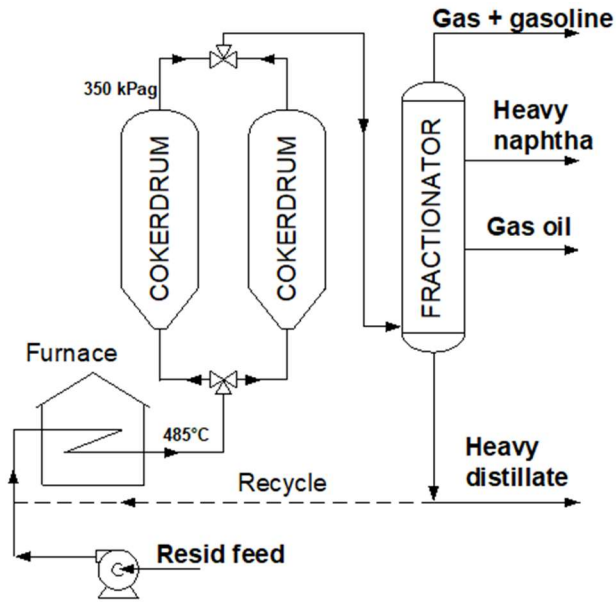

Figure 7: Delayed Coking Process

Alkylation

In the alkylation process, olefin yield, commonly from a fluid catalytic cracker (FCC), is used as a feedstock and reacted with isobutane in the presence of an acid catalyst. A centrifugal compressor is needed to recirculate the isobutane. The resulting alkylate is available for market as high octane fuel, or is blended with lower grade gasoline to raise the octane level. The high-octane value makes alkylate an excellent blendstock for premium grades of gasolines. Since alkylate contains no olefins, no aromatics, and no sulfur, it is also an excellent blendstock for use in reformulated gasolines. Figure 8 shows a photograph of a typical alkylation plant.

Figure 8: Alkylation Plant (Courtesy of Motiva)

Some of these services will be discussed in significantly more detail below.

Axial and Centrifugal Compressors

Axial and centrifugal compressors are used throughout the refinery to move gas from low pressure areas to higher pressure areas within the various plants. The types of gases moved may be simple such as air or hydrogen; or they can be quite complex and comprised of a multi- component mixture that may vary with plant conditions.

Axial compressor applications are fewer and include the following:

- FCCU main air blower (axial compressors are usually used for larger plants with higher flow requirements)

Centrifugal compressor applications are numerous and include but are not limited to the following:

- Hydrogen recycle
- Wet gas
- FCCU main air blower
- Alkylation refrigeration compressor
- Heat pumps
- Instrument and plant air supply

Both axial and centrifugal compressors operate on the dynamic principle. They are selected based on requirements of flow, range, pressure ratio, performance, and specification. Reliability is a primary concern in refinery operations, and machinery specifications can be quite strict for critical applications. The specifications used for refineries are API 617, "Axial and Centrifugal Compressor and Expander-Compressors" for main chemical processes, and API 672, "Packaged, Integrally Geared Centrifugal Air Compressors for Petroleum, Chemical, and Gas Industry Services" for instrument air. End users may also have their own specifications in addition to those of API.

It should be noted that within this document, a "stage of compression" is considered to be the same as a "compressor section" whereas a "compressor stage" is considered to be a single impeller/diffuser combination within a "compressor section" or "stage of compression".

Each compressor application is discussed further in the sections below.

Hydrogen Recycle Compressors

Hydrogen recycle compressors are used in a variety of refinery processes including hydrocracker, hydrotreater, platformer, and isomerization units. Their main purpose is to move feedstock through a reactor, then separators, then recycle gas that is mostly hydrogen plus any remaining hydrocarbon vapors (usually heavy, high MW vapors) through the compressor and back to the process loop. Any hydrogen consumed by the process is replaced by a make-up gas compressor, typically a reciprocating compressor. Suction pressures for a given unit can vary a great deal depending on the process, anywhere from 100 psig to 2500 psig (7 barg to 170 barg). Since the gas is mostly hydrogen, the molecular weight will be low, typically in the range of 4 to 8. Low mol weights are difficult to compress and have little pressure rise or volume reduction per stage (i.e., light gases require more work input for a desired pressure increase than heavy gases). This results in a compressor that may have many stages, up to 12, or run at high speeds, or both. Required flow rates are typically low so frame sizes range from small to medium; most inlet nozzle diameters range from 6 to 16 inches (150 to 400 mm); and impellers have low flow coefficients. These factors keep the bearing span reasonably short, and combined with the low gas density, allow for successful rotor dynamics even with the large number of stages and high rotor speeds.

The minimal volume reduction per stage means that all impellers have similar flow coefficients; adjacent stages may even be duplicates. This is fine during normal operation with hydrogen rich gas, but is problematic during start-up when much heavier nitrogen gas is run through the process to dry out lines and warm up the reactor. The front stages get pushed into the choke region while the volume of nitrogen is greatly reduced so that the back end stages are close to their surge line. The operating range is significantly reduced under nitrogen operation. The temperature rise across the compressor is also significantly increased and the rotor speed must be slowed to keep the discharge temperature just below the maximum allowable working temperature of the casing O-ring seals. A fixed speed compressor often must have hydrogen mixed with the nitrogen to reduce the gas molecular weight to a point where the rotor can operate aerodynamically.

If it is an older compressor with bushing style wet seals then nitrogen operation poses an additional problem. The seal oil supply pressure is commonly controlled at a few psi above compressor suction pressure by the static head of an overhead tank. Suction pressure will typically be much lower with nitrogen operation leading to a smaller differential pressure to ambient, so not enough cooling oil gets forced through the tight bushing clearance which is necessary to limit oil flow during normal, high pressure service. Rotor speed must be reduced to limit shear and temperature rise of the oil in the bushings. Either gas discharge temperature or wet seal operation will set the maximum rotor speed for nitrogen operation.

Dry gas seals do not share this problem, but instead have a different set of operational problems in hydrogen recycle service. The gas supplied to the seals must be clean and dry; often hydrogen recycle gas is neither. A heater and coalesce is often required to maintain sufficient superheat and the placement of the DGS panel to avoid liquid dropout accumulation is critical. Off spec reactions can lead to chloride formation. These salts can build up in the gas path and be carried into the dry gas seal supply unless stopped by the seal gas filtration system. In one refinery, seals suffered a catastrophic failure when a clogged filter element collapsed and allowed a large amount of debris to enter the gas seal cartridges.

The other major concern for reliable gas seal operation is elimination of moisture. Many of the heavy hydrocarbons entering the recycle compressor are very close to their dew points. API 692 requires a minimum of 35 ºF (20 ºC) between seal gas supply and dew point temperature. Gas seal conditioning systems may employ both heaters and coalescing filters. Insulation of interconnecting lines is a must. Another refinery in the southern U.S. failed gas seals several times during thunder storms when the sudden drop in temperature from the rain cooled the uninsulated pipes and caused condensation of the seal gas. The problem was corrected with heat tracing and insulation. All seals should have a clean source of gas available for start-up. For high pressure compressors a ready source may not be available. Make up hydrogen from the reciprocating compressor may be contaminated with cylinder lubricating oil. Other sources may not be able to achieve the required pressure. Starting without a clean source of seal gas will lead to cumulative fouling of the seal faces and eventual failure. A booster compressor as part of the gas conditioning system is the best solution.

The same problems putting the dry gas seals at risk can degrade the aerodynamic performance of the compressor. Chloride fouling will build up on rotating and stationary flowpaths, increasing surface roughness and narrowing passageways. Stationary labyrinth seal teeth can become plugged and less efficient. Sloughing off pieces of the built up fouling will cause unbalance and can increase the rotor vibration level. Taking the compressor off line and performing multiple wash and rinse cycles (using special tools) with water or condensate and soda ash will dissolve the chlorides. The conductivity of the drain fluid should be measured after each wash cycle to determine the amount of remaining chlorides. This is followed by a drying procedure. The frequency of washing is determined by the rate of foulant build up and an economic decision of the cost of downtime verses the reduction of plant capacity.

Liquids, either condensed hydrocarbons or possibly amine system carry over, should be prevented from entering the compressor by an inlet piping system with low point drains and an adequately sized knock out drum. Liquid droplets can cause erosion and large slugs of liquid can cause more serious damage to the rotor.

Materials used in hydrogen recycle compressors must also receive careful consideration. Yield strengths of stationary and rotating parts must be limited to prevent hydrogen embrittlement. They must be further limited if H2S is present in the process. The chlorides present may require stainless steel cladding of wetted surfaces to prevent stress corrosion cracking. Anti-fouling coatings may be applied to the gas path to extend run time between cleaning cycles.

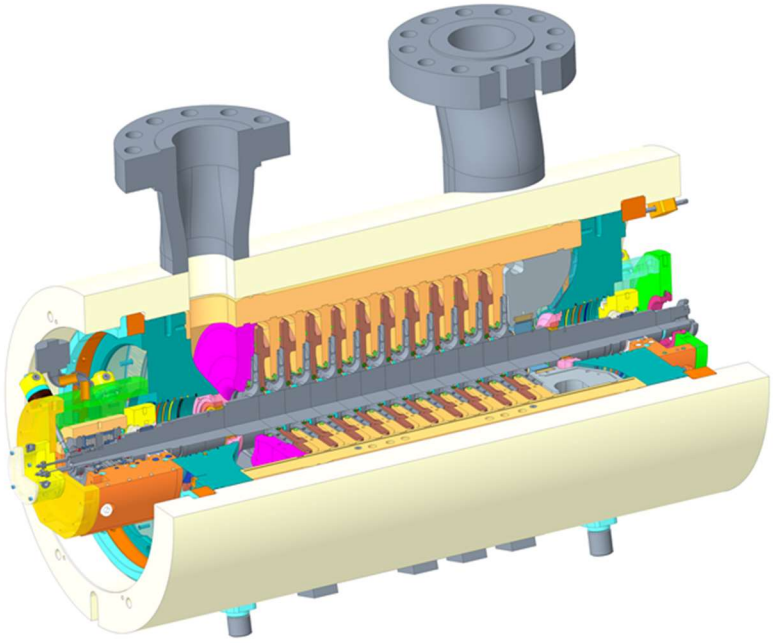

Figure 9. Multistage Centrifugal Compressor

Wet Gas Compressor

Major refinery conversion units (cat cracker, delayed coker, and flexicoker) employ a fractionator (combination tower) that separates out gases and various liquids. The gas, which is taken from the top of the fractionator contains condensable hydrocarbons and is therefore referred to as a 'wet gas'. The gas stream is passed to a vapor recovery unit where it is compressed by the wet gas compressor then routed to a gas plant for treatment to remove condensable liquids and sulfur components. A schematic of this process is shown in Figure 10. The control point for the fractionator pressure is the overhead accumulator/compressor suction. Therefore, the wet gas compressor serves two purposes: (1) control the conversion unit operating pressure by providing suction and moving gas from the top of the fractionator, and (2) move the gas by compressing up to the gas plant required pressure.

The overhead receiver pressure, and thus the reactor pressure, is controlled by varying the suction throttle valve for fixed speed compressors driven by fixed speed motors, or by varying the speed for variable speed compressors driven by steam turbine or variable speed motor. When the compressor is operating at full capacity, any excess gas from the process would need to be flared. Therefore, the feed rate or process temperature must be reduced to lower the wet gas rate to be within the compressor capacity.

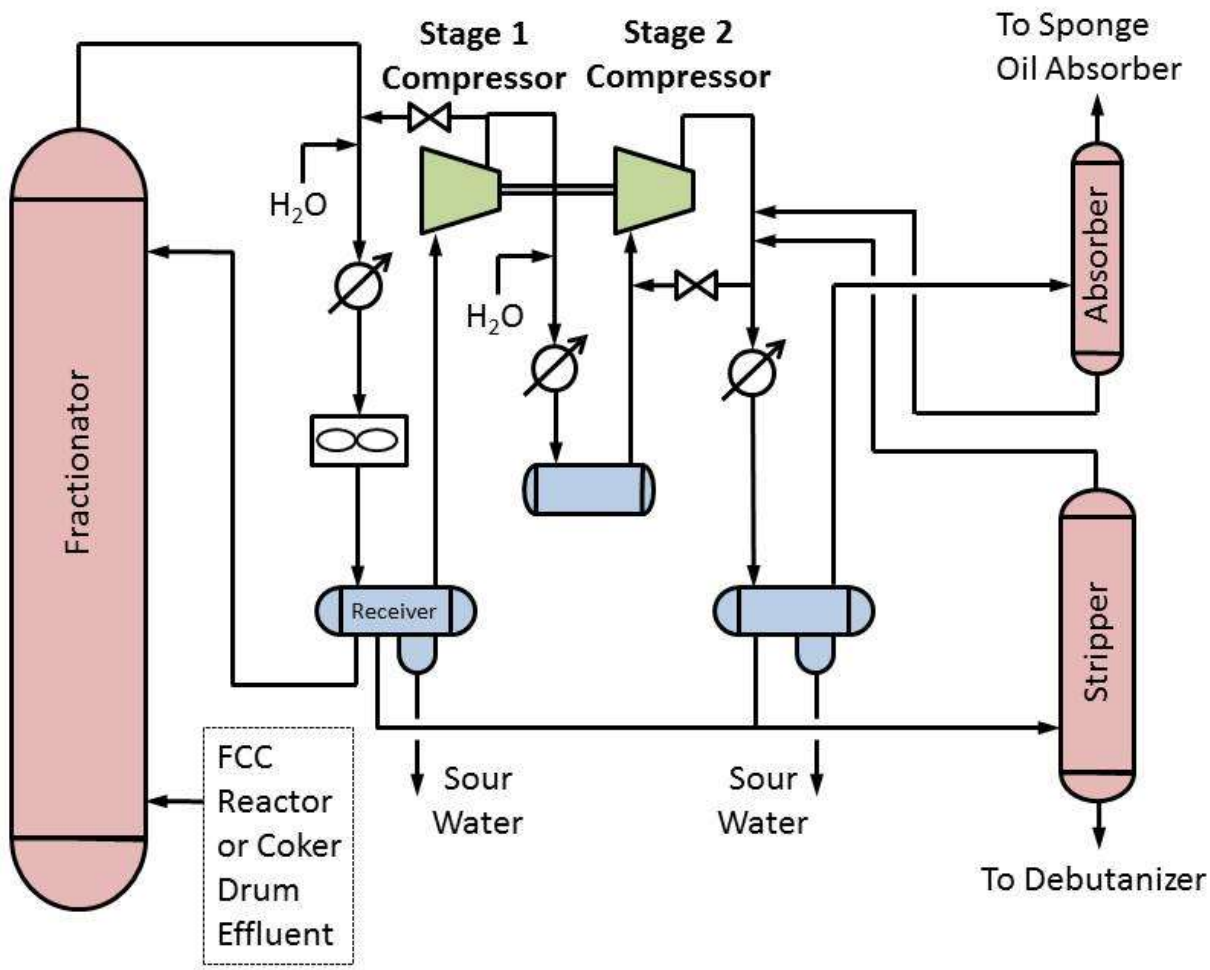

Figure 10: Wet Gas Separators

Compression is performed in either one or two stages (sections) of compression. Most configurations involve two stages. Vapors from the fractionator overhead drum flow to the compressor suction drum and then to the first stage of the compressor (Figure 10). The first stage compressor discharge is then sent to an inter-stage separator that may use coolers to condense the gas and separate the phases. The gas phase, which is typically cooled, is passed to the second stage compressor inlet while the liquid phase is pumped elsewhere. The second stage compressor discharge is combined with several streams (Figure 10) and sent to a stripper.

Most wet gas compressors combine two stages of compression into a single compressor body with an intercooler/separator between the stages of compression. The two stages of compression can be arranged in either a compound or a back-to-back configuration. Combining two stages of compression into a single body has advantages and disadvantages as compared to using two separate bodies. Among the advantages: The footprint and capital cost is reduced. The number of most parts is halved including the rotor, bearings, dry gas end seals, and couplings. This further carries over to the number of spares that need to be stocked. The disadvantages are few and primarily relate to managing the design through good engineering: Four nozzles (as opposed to two) require some design consideration to ensure that they are properly located and spaced. The longer bearing span of the two section compressor can be a greater challenge with respect to rotordynamic design, but this is normally quite manageable. Seal leakages across sections must be properly managed and accounted. One particular disadvantage for the single body two section compressor is that the overall settleout pressure will equalize in the two sections due to internal leakage. Associated piping, vessels, and other process equipment must be designed to accommodate this combined settle-out pressure. Overall, the advantages reside with the end user and the disadvantages reside with the manufacturer.

Regardless of whether two compressor sections are in a single body or separate bodies, each section has its own performance map. Because the inter-condenser system condenses a portion of the low-stage gas, mass rate and gas molecular weight are lower into the second section. Because the first and second sections have separate operating curves, each requires an independent surge control system. One part of the compressor may be operating with an anti-surge spillback open to avoid surge, while the other may have the spillback closed.

Figure 11 shows a compressor that has been commissioned in wet gas coker service. In this case, the two section are arranged in a compound configuration with down nozzle arrangement that is hidden from view. The suction inlet is at the non-driven end of compressor; the iso-cool discharge and inlet are near the center; and the final discharge is near the driven end of the compressor. Wet gas compressors are subject to fouling from deposits formed by polymerization of the olefins in the gas stream. These deposits usually form on the compressor rotor. The compressor in Figure 11 is equipped with a wash nozzle system for continuous compressor wash. The normal was medium is light cat naphtha.

Figure 11: Steam Turbine Driven Wet Gas Coker Compressor

The composition of wet gases can be quite complicated and comprised of numerous constituents. In this particular case, there were twenty-seven constituent gases. Furthermore, gas composition can vary during operation. In the FCC process, reactor effluent composition, overhead receiver pressure and temperature, and gasoline endpoint all influence the amount of wet gas and its molecular weight [Barletta and Golden, (2013)]. Compressor performance prediction for minimum and maximum molecular weights are therefore recommended.

Among the constituents in a wet gas may be hydrogen sulfide and amine compounds which can cause corrosion and fouling deposits. This is discussed some more later-on in this text.

Some of the features of wet gas compressor include the following:

- High molecular weights that can vary
- High pressure ratios
- Iso-cooling applications – typical
- Two process sections in a compressor casing – typical
- Mid to large sized compressors
- Fouling applications
- Wash oil system
- Anti-surge loop for each section
- Corrosion

Main Air Blower

The Main Air Blower or MAB in an FCCU provides air (containing oxygen) necessary for combustion to burn coke away from catalyst in the regenerator. The rate of air supplied must match the rate that coke is created. The blower can be a large centrifugal compressor or newer plants will typically use an axial compressor to increase efficiency. This is one of the more critical compressors in terms of lost production if the machine experiences unscheduled outages. Axial compressors are also well suited to constant head, variable flow applications, such as the MAB. The blower may be driven by a motor, steam turbine, power recovery turbine, or combination of the three.

Compressing air simplifies many things; simple labyrinth packings are used to seal the shaft, the balance piston leakage can be vented to atmosphere rather than recirculated to the compressor inlet, and a blow off valve to atmosphere is used for surge control. Inlet conditions will be atmospheric while discharge conditions can be up to 60 psig (4 barg) and 360 to 500°F (180 to 260°C). Compressor throughput can be increased during periods of high ambient temperature through the addition of an inlet air chiller.

These discharge temperatures are relatively high for most centrifugal compressors. This can lead to special design considerations such as center supported diaphragms (to allow for radial thermal growth), special fits for impellers and the balance piston, and large splitline gaps for aluminum or stainless steel labyrinth seals (again for thermal growth).

Adequate inlet filtration is also required. Salt air and dust can foul axial compressor blades. The thin, cantilevered airfoils used for axial blades are less robust than centrifugal impellers and more susceptible to poor aerodynamic performance, or even natural frequency changes, from buildup of foulants. In addition to good inlet filtration, anti-fouling or anti-corrosion coatings can be applied to the inlet rows of blades. Performance can still degrade despite these measures and cleaning of the blades may be required. The simplest method is to run five pounds of an organic abrasive, such as rice or crushed walnut shells, through the rotor. However, if the blades have a coating, then an atomized spray of liquid cleaning solution is recommended instead of the abrasives.

Of course large foreign objects should be kept out of compressor inlet to prevent serious damage to rotor blades. A worker at a Midwest U. S. refinery was walking under the inlet hood of a centrifugal MAB and had his hard hat pulled from his head. Fortunately, it only caused a minor vibration increase from its imbalance and eventually broke apart and was carried through the compressor.

A compressor trip and discharge check valve failure can lead to 1000°F (540°C) catalyst flowing back into the MAB. If it is an axial compressor the blades will be severely damaged and the heat can distort the casing which will affect blade tip clearances and sealing ability. While a centrifugal compressor is more robust, it still must be opened and all catalyst cleaned out.

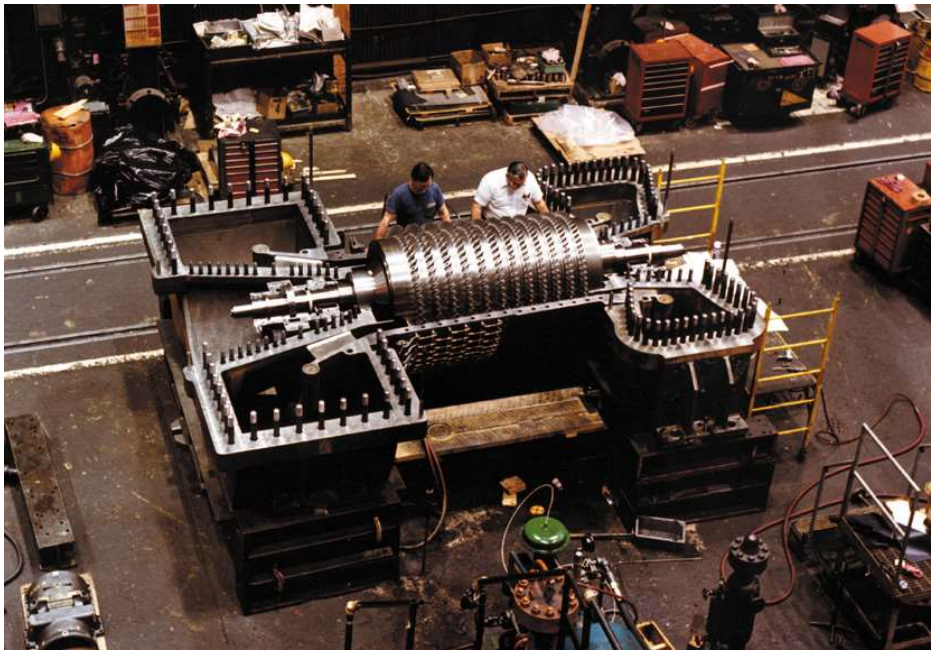

Figure 12: Axial Compressor for Main Air Blower Service

Alkylation Refrigeration Compressor

In the alkylation process, olefin yield, commonly from a fluid catalytic cracker (FCC), is used as a feedstock and reacted with isobutane in the presence of an acid catalyst. The resulting high octane alkylate is used for gasoline blending to improve the gasoline quality. The sulfuric acid (H2SO4) alkylation process requires a refrigeration section whereas the hydrogen fluoride (HF) alkylation process does not. Figure 13 shows the refrigeration configuration for the STRATCO® effluent refrigeration alkylation process, which is one of two processes that are commonly used. The refrigeration section is typically comprised of a centrifugal compressor and a depropanizer. Since any propane that is delivered with the feed tends to concentrate in the refrigeration section, the depropanizer is required to manage the propane concentration.

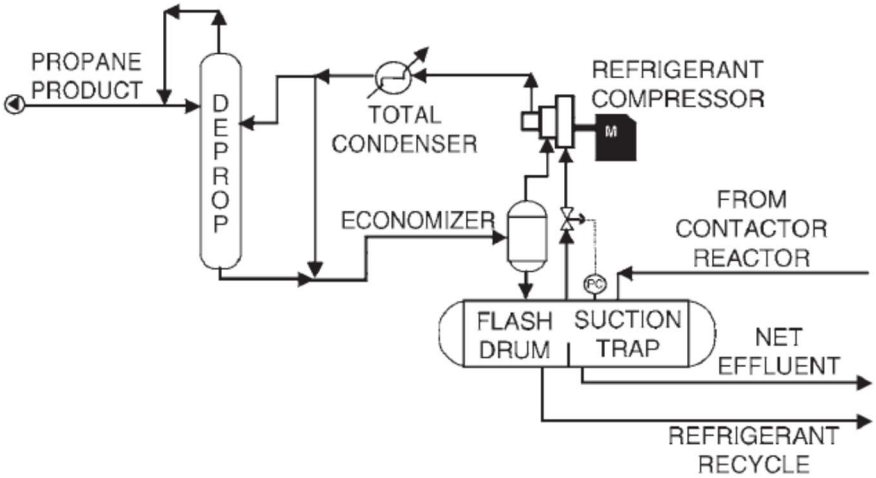

Figure 13: STRATCO® Effluent Refrigeration Alkylation Process. (Branzaru, 2001)

In the effluent refrigeration alkylation process, partially vaporized hydrocarbon effluent consisting of isobutane and alkylate with normal butane and a small amount of propane from the feed is sent from the contactor reactor to the suction trap/flash drum where the vapor and liquid phases are separated. The vapor stream from the suction trap/flash drum consists of isobutane and a lesser amount of normal butane and propane. This vapor stream is sent to the compressor.

During normal operation, changing the pressure of the suction trap controls the reactor temperature. The suction trap pressure is controlled by varying the suction throttle valve for fixed speed compressors driven by fixed speed motors, or by varying the speed for variable speed

compressors driven by steam turbine or variable speed motor. Opening the suction throttle valve or increasing the compressor speed will lower the suction pressure, which in turn decreases the bubble point temperature of the refrigerant thereby decreasing the contactor reactor temperature.

The refrigerant gas composition also affects the effluent vaporization temperature. The refrigerant gas composition is typically made of more than 70% isobutane with the balance made up of normal butane and propane plus relatively trace amounts of other gases. The molecular weight of the gas mixture is typically quite high. The higher the propane content, the higher the compressor discharge pressure required to condense the stream in the total condenser. And the lower the propane concentration in the loop, the higher the bubble point temperature of the effluent and the higher the reactor temperature. Therefore, the propane content needs to be controlled for best operation.

Incorporation of an economizer as shown in Figure 13 can result in savings of 5 to 10% in compressor power requirements. The economizer operates at a pressure between the condensing pressure and the compressor suction pressure. Refrigerant condensate and depropanizer bottoms are flashed and sent to this vessel. The economizer vapor flows to an intermediate stage of the compressor. The sideload gas composition typically has higher propane content and lower isobutane content.

Overall, the refrigerant compressor serves two purposes: provide suction in order to maintain the desired reaction temperature, and compress and cycle the isobutane that is flashed as refrigerant in order to cool the feed hydrocarbons to the desired reaction temperature.

The process with economizer as shown in Figure 13 requires a refrigeration compressor that can accommodate two inlets. Figure 14 shows a ¾ cross-section of just such a compressor that is used for Alkylation refrigeration. In this case, the two streams coming from the suction trap and economizer are handled by a single refrigeration compressor having two sections with a small incoming sideload in between each section. Per design, the sideload compressor is well-suited for refrigeration application where gas temperature increases in a given section are reduced by the mixing of the sidestream flow into the suction of the following section of the compressor. This maintains gas temperature throughout the machine at reasonable levels.

Whereas most compressor applications require a dedicated knockout drum to ensure that no unatomized liquids enter the compressor, the effluent refrigeration process is somewhat unique in that a dedicated compressor suction knockout drum is not required and is actually discouraged due to the additional pressure drop between the suction trap and compressor suction [Branzaru, (2001)]. Liquid knock-out is handled by the suction trap/flash drum.

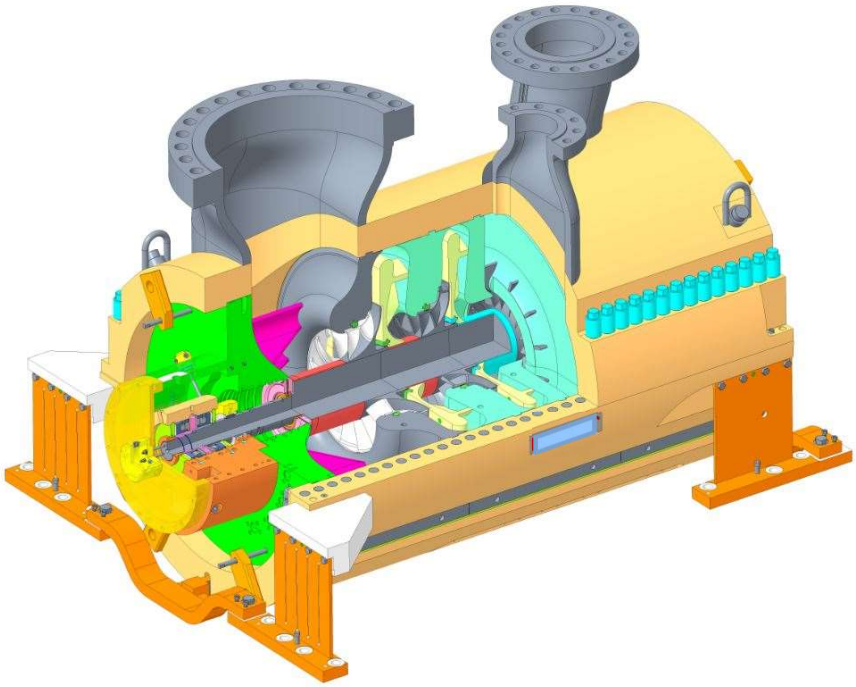

Figure 14: Alkylation Refrigeration Compressor

The alkylation refrigeration compressor shown in Figure 14 has the following features:

- 3787 HP (2824 kW) variable speed steam turbine driver
- Mid-sized compressor with two sections each comprised of two stages
- Horizontal split casing
- Three nozzles: one main inlet, one sideload, and one discharge
- Internal sideload mixing
- Up nozzle design necessitates piping removal for maintenance
- Drains at each stage

The inlet for this compressor has a pressure slightly above atmospheric and a temperature of roughly 25°F whereas the discharge has a pressure of roughly 110 psia and a temperature below 150°F. An inlet pressure below atmospheric must be avoided to prevent risk of sucking air into the process. Alkylation is not considered to be a fouling process and the compressor typically does not require a high degree of maintenance as compared to others.

The typical gas composition is comprised of three primary gases: isobutane, propane, and butane. Secondary gases may consist of various other gases. Trace amounts of sulfuric acid may also be present. Gas concentrations and molecular weight change in the two sections of compression. Gas properties for this application are easily predicted by most compressor manufacturers.

Instrument Air

Reliable instrument air is crucial to refinery operation as it is required for control of pneumatic valves, actuators, and other instruments throughout the refinery. For proper instrument operation, the instrument air should be oil and dust free, and sufficiently dry to prevent condensation of water. Compressors utilized in an instrument air system may be either reciprocating, screw, or centrifugal, depending on size and user preference. Compressors that use no oil in the parts exposed to the compressed are recommended.

Figure 15 below shows the typical layout for a centrifugal compressor arrangement including the inlet filter, interstage coolers, and discharge arrangement.

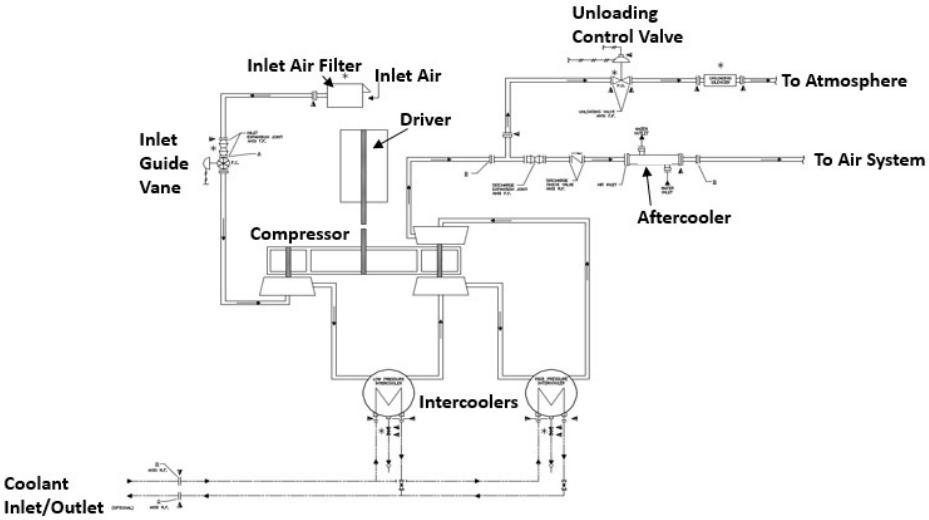

Figure 15: Integrally Geared Compressor Layout (Courtesy FS-Elliott)

Large capacity instrument air compressors are typically of the integrally geared design having either two or three stages of compression. API 672 outlines the requirements and design guidelines for these general-purpose integrally geared air compressors. Reliability is often one of the primary concerns when considering this type of compressor and as such API 672 dictates the compressor and major auxiliaries are to have a minimum service life of 20 years and are to be able to operate uninterrupted for at least three years. The compressor package typically consists of the air compressor itself including an aftercooler and a dryer package. The compressor provides air at a desired discharge pressure and flow, which due to the compression process will be at an elevated temperature. The aftercooler is utilized to reduce the temperature of the air to a level suitable for the instrumentation. Since in most cases the air is taken from the atmosphere, it is considered wet or moist. This moisture can be detrimental to the instrumentation; therefore, the dryer is used to remove the moisture content from the air until it is at an acceptable dew point temperature so that no condensation will occur. The air produced by this combination of compressor and dryer is then used to supply air to pneumatic valves and instruments throughout the refinery, some of which are critical to the operation and safety of these refinery processes.

Given the nature of the application, these compressors are typically provided with one or more spare compressors each capable of meeting the required air flow 100%. These compressors can be electric motor or steam turbine driven when steam is available. Each individual compressor often includes features offering some level of redundancy including dual oil coolers, dual oil filters, redundant alarm/trip instruments, and redundant hardware in the control panel. Figure 16 shows an example of a higher-end instrument air compressor skid.

Figure 16: Integrally Geared Centrifugal Instrument Air Compressor (Courtesy FS-Elliott)

Drivers for Refinery Compressors – Steam Turbines

Several options for compressor driver selection exist for refinery applications. The most common ones are steam turbines, gas turbines, gas expanders, and electric motors. Decision criteria between these drivers have been extensively discussed in the literature but there is little consensus. Thus, the driver options will be discussed below but, because of the complexity of the subject, only high-level information is provided.

Sizing and Selecting the Steam Turbine

In most configurations the centrifugal compressor is sized and optimized for the required pressure and flow of the process. The steam turbine is subsequently designed with the defined speed and power requirements of the compressor as operational points. The compressor speed is selected at the most efficient point for the compression requirements, however, this speed is rarely the ideal speed for the steam turbine and the efficiency of the driver is usually sacrificed to ensure optimum compressor operation. Ultimately, this might not represent the most efficient use of the machinery as a total string of equipment.

Consider the speed versus efficiency curve shown in Figure 17. The two curves represent the optimal efficiency vs. speed for the compressor and turbine. The curves will never perfectly align and one or both pieces of machinery will need to be operated away from peak efficiency in a direct drive application. A speed changing gear can be used to match the optimal efficiency for each piece but that option is typically unattractive because of the increased capital and maintenance cost associated with the additional equipment. Operating case #1 is the best speed for the compressor, but it requires the turbine to be run slower at a reduced efficiency and increased steam consumption. Operating case #2 is the optimal turbine speed, but the compressor is running too fast and the efficiency is sacrificed. Case #3 represents the optimal operating speed and balance of efficiency for the compressor and turbine. However, balancing the efficiency does not always equate to the best configuration since it does not account for the value of the process gas or the steam production costs. If there is an excess of steam in the plant and the compression gas is of high value, then it is very likely that Operating Case #1 will be the best option. Careful upfront design collaboration between the purchaser and the equipment manufacture will ensure the machinery is built to offer the best return on investment.

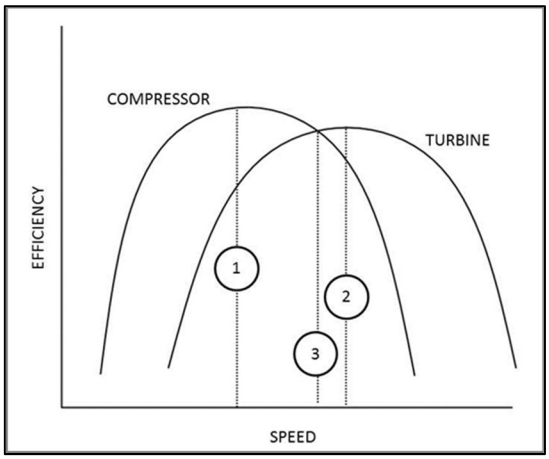

Figure 17: Compressor and Turbine Speed vs Efficiency Curves

Defining the maximum allowable pressure and temperature

Safety is of the upmost importance to an OEM supplier of steam turbines. Sizing and designing the main casing to safely contain the steam at the supplied pressure and temperature requires rigorous design and analysis. No steam supply is consistent and the casing must be capable of safely operating through a range of pressures and temperatures. The American Petroleum Institute (API) has long used the National Electrical Manufacturers Association (NEMA) SM-23 as a guideline for pressure and temperature fluctuations. NEMA specifies a maximum allowable pressure (MAWP) of 110% of the normal steam supply and a maximum allowable working temperature (MAWT) of +15°F (8°C) of the normal steam temperature. API considers this a minimum recommendation and thus, the purchaser is allowed to specify a maximum allowable pressure and temperature of their choosing. As a purchaser, you want to be certain that you don't underestimate the swings of the boiler, which may not even be sized or selected yet, and it's common to "round up" to a larger number to be certain there are no problems in the future. This trivial rounding can seems meaningless but it can greatly increase the cost and complexity of the turbine design for the OEM.

For example, consider a steam turbine with normal supply pressure of 750 psig and 850°F (454°C). Per the API, guidelines for MAWP and MAWT would be 825 psig and 865°F (462°C) respectively. However, the boiler hasn't been selected at the time the API datasheets are filled out for the steam turbine request for quote so the purchaser writes down a nominal temperature of 932°F (500°C) to cover any standard boiler configuration below the 500°C threshold.

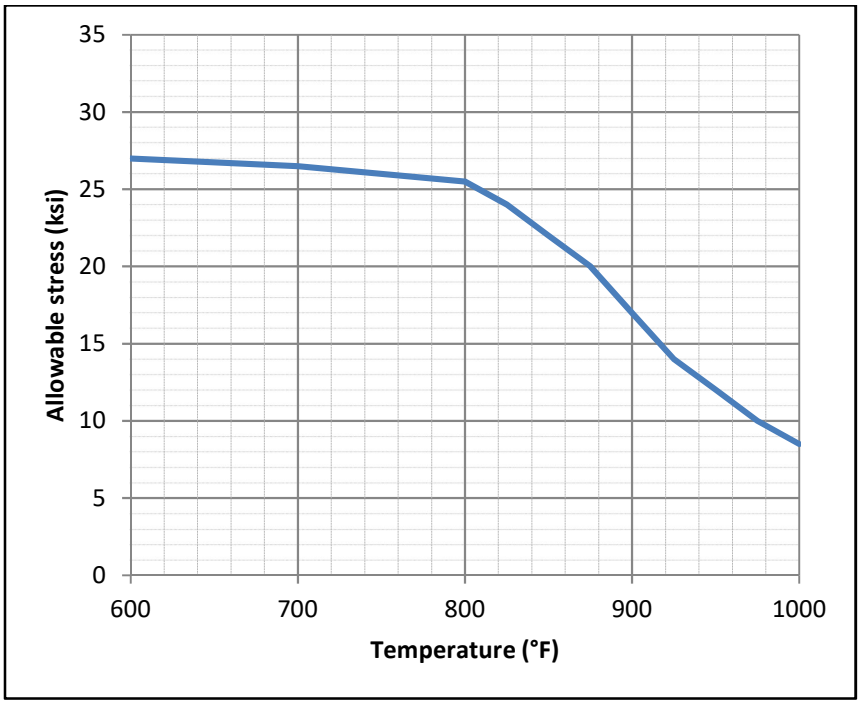

Figure 18: Allowable stress vs temperature for Cr-Mo Steel

A common material for high temperature steam turbines (above 750°F) is chrome-molybdenum alloy steels. Using the values show in Figure 18, the allowable stress at the API/NEMA MAWT of 865°F is approximately 21,000 psi. If the MAWT is instead defined as 932°F (500°C), the allowable stress is reduced to 14,000 psi or a 33% reduction in allowable stress. This will require the turbine manufacturer to use a thicker casing or stronger alloy steel and either option will cost more money to produce. Ultimately, it's unlikely that the turbine will ever see a temperature of 932°F and the purchaser will have paid for a more expensive and heavier casing with capacity they will never utilize. The best approach is to define a working steam pressure and temperature and require both the boiler and turbine manufactures to design the API/NEMA tolerances.

The Importance of Steam Quality

The best way to maximize profits in a refinery is to minimize the unplanned outages attributed to machinery failure. For steam turbines the number one source of performance degradation and failure is poor steam quality. Boiler carryover and steam contamination can have severe adverse effects on the internal components of a steam turbine. Corrosion and pipe scale upstream of the turbine can become dislodged, carried into the machine and impact the initial rotating row(s) of rotor blades. As the steam expands through the turbine it will eventually fall below the superheated region for pressure and temperature and become saturated. The rotating and stationary stages of a steam turbine located in the region of transition will experience the most adverse effects from impurities and various oxides that can nucleate and attack the metal which can lead to cracks, fatigue and ultimate failure. Water soluble impurities (salts, acids, etc.) will nucleate on the rotating and stationary parts and eventually reduce the flow area in the stator and rotor. Examples of this buildup can be seen in Figure 19 and Figure 20. This reduced area increases the internal pressure, thus requiring more steam to maintain the power levels. Eventually the flow will be chocked to the point that the turbine will be unable to pass sufficient steam flow to maintain the required power. Water soluble containments can be removed by "washing" the turbine with water injected into the turbine inlet. This procedure is by no means trivial and careful consideration and planning must be done to determine the proper amount of water injection as to not overwhelm the turbine with excessive water which in itself can damage the machine. The best way to maximize run time and mean time between maintenance for the steam turbine is to closely monitor the turbine condensate and boiler feedwater chemistry to minimize the contaminants entering the steam turbine.

Figure 19: Rotor Fouling

Figure 20: Stator Fouling

Non-Return Valves and the Impact on Steam Turbine Overspeed

Every steam turbine is designed with consideration for multiple shutdown scenarios to ensure the turbine integrity is maintained. To be compliant with API, the steam turbine must be capable of maintaining a certain percent of speed in a complete loss of coupled load, as well as an instantaneous loss of coupled load (coupling failure).

When a signal for the overspeed protection system is sent to close the trip valve a number of factors contribute to the continued speed rise of the steam turbine:

- Rotor inertia: heavier rotors will help to resist speed increase
- Signal delay or the time it takes for the signal to reach the trip header and open the solenoid valves
- Trip valve closing time is the response time for the trip valve to close
- Expansion of entrapped steam which will continue to deliver power to the rotor until the turbine reaches a state of equilibrium

Of these four factors, an often overlooked and significant contributor to rotor overspeed is the entrapped steam volume. Trip and throttle valves are typically attached directly to the steam turbine to minimize the amount of entrapped steam in the system. On an extraction or induction steam turbine however, the non-return valves (for extraction units) or trip valve (for induction units) and any pressure relief valves are typically located in a convenient location for accessibility and maintenance. Depending on the installation, this can place the valves a considerable distance from the turbine. The steam entrapped between the valve and the turbine will be expanded through the rotor and continue to increase the speed of the rotor. In the case of a broken coupling, when the rotor has no coupled load, the expanding steam can add considerable speed to the rotor before windage losses begin to decay the speed. The turbine manufacture can estimate a total allowable amount of entrapped steam that can be tolerated for a particular unit. This information can be shared with the purchaser to assist in the plant layout and location of various safety valves.

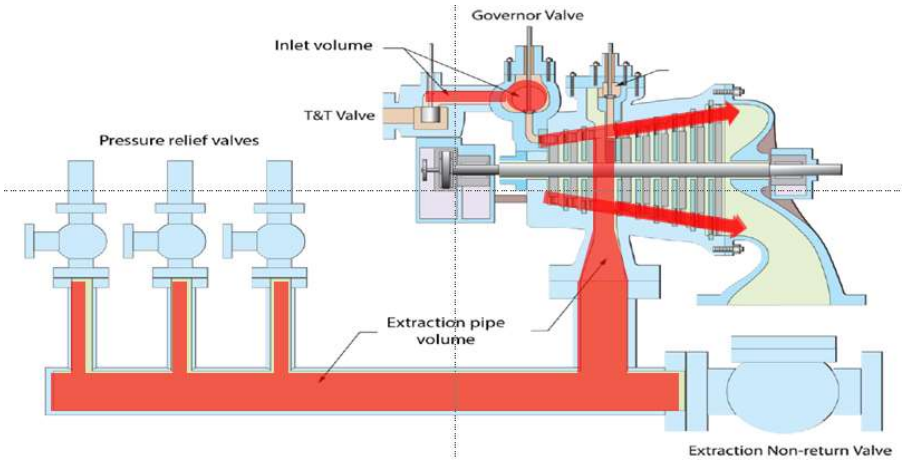

Figure 21: Entrapped Steam Volume

Drivers for Refinery Compressors – Gas Turbines

<u>Gas Turbine Basics</u>

Any gas turbine consists of (at least) a compressor, a combustor, and a turbine. The compressor (usually an axial flow compressor, but some smaller gas turbines also use centrifugal compressors) compresses the air to several times atmospheric pressure. In the combustor, fuel is injected into the pressurized air from the compressor and burned, thus increasing the temperature. In the turbine section, energy is extracted from the hot pressurized gas, thus reducing pressure and temperature. A significant part of the turbine's energy (from 50 – 60 percent) is used to power the compressor, and the remaining power can be used to drive generators or mechanical equipment (gas compressors and pumps). Industrial gas turbines are built with a number of different arrangements for the major components:

- Single-shaft gas turbines have all compressor and turbine stages running on the same shaft.
- Two-shaft gas turbines consist of two sections: the gas producer (or gas generator) with the gas turbine compressor, the combustor, and the high pressure portion of the turbine on one shaft and a power turbine on a second shaft (Figure 22). In this configuration, the high pressure or gas producer turbine only drives the compressor, while the low pressure or power turbine, working on a separate shaft at speeds independent of the gas producer, can drive mechanical equipment.
- Multiple spool engines: Industrial gas turbines derived from aircraft engines sometimes have two compressor sections (the HP and the LP compressor), each driven by a separate turbine section (the LP compressor is driven by an LP turbine by a shaft that rotates concentric within the shaft that is used for the HP turbine to drive the HP compressor), and running at different speeds. The energy left in the gas after this process is used to drive a power turbine (on a third, separate shaft), or the LP shaft is used as output shaft.

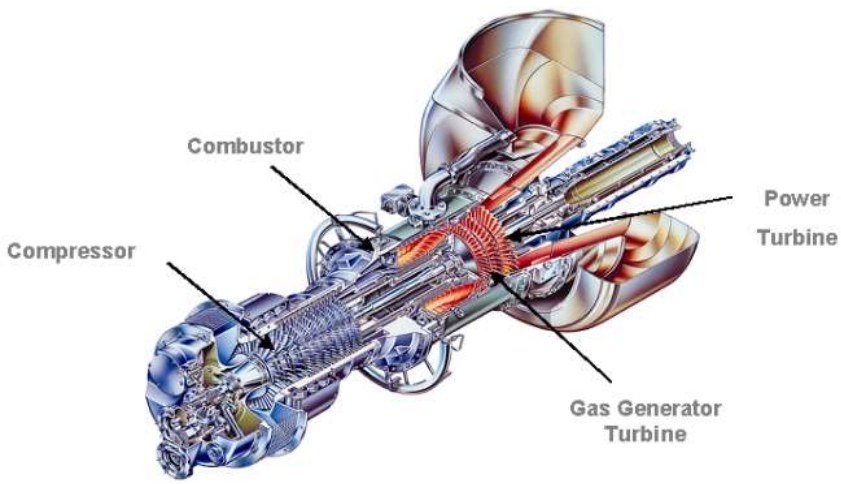

Figure 22: Typical Industrial Gas Turbine

Two different types of combustion systems are used for industrial gas turbines, depending on the fuel gas and emissions requirements:

- Conventional combustion systems
- Lean Premix combustion systems

Gas turbines can operate with a wide variety of fuels, including opportunity fuels such as fuels with high contents of Hydrogen, CO2 or CO and thus, are very suitable for operations in refineries. Figure 23 shows typical gas sources for gas turbine fuels.

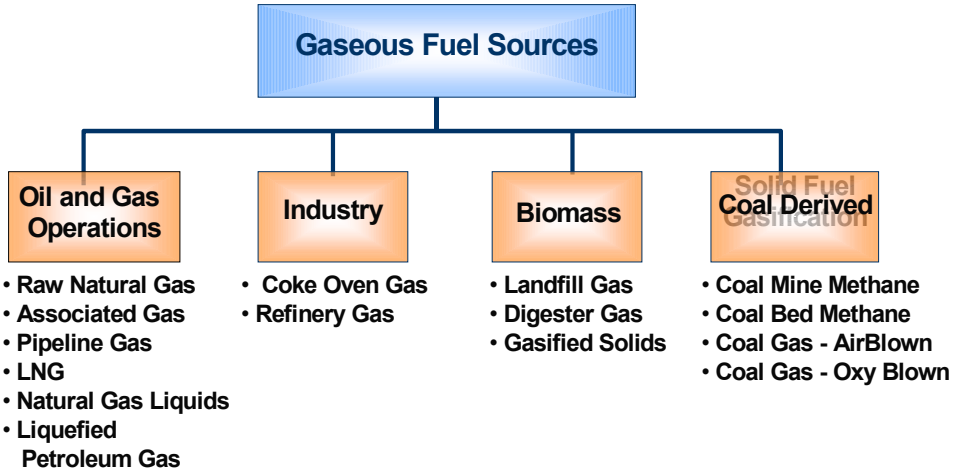

Figure 23: Gas Turbine Fuel Sources

Gas Turbine Performance Characteristics

The gas turbine power output is a function of the speed, the firing temperature, as well as the position of certain secondary control elements like adjustable compressor vanes, bleed valves, and in rare cases, adjustable power turbine vanes. The output is primarily controlled by the amount of fuel injected into the combustor. Most single-shaft gas turbines run at constant speed when they drive generators. In this case, the control system modifies fuel flow (and secondary controls) to keep the speed constant, independent of generator load. Higher load will, in general, lead to higher firing temperatures. Two-shaft machines are preferably used to drive mechanical equipment, because being able to vary the power turbine speed allows for a very elegant way to adjust the driven equipment to process conditions. Again, the power output is controlled by fuel flow (and secondary controls), and higher load will lead to higher gas producer speeds and higher firing temperatures. The influence of ambient temperature on gas turbine performance is very distinct.

Any industrial gas turbine in production will produce more power when the inlet temperature is lower, and less power when the ambient temperature gets higher. The rate of change cannot be generalized, and is different for different gas turbine models. Full-load gas turbine power output is typically limited by the constraints of maximum firing temperature and maximum gas producer speed (or, in twin spool engines, by one of the gas producer speeds). Gas turbine efficiency is less impacted by the ambient temperature than the power. Figure 24 shows the impact of ambient conditions on gas turbine performance.

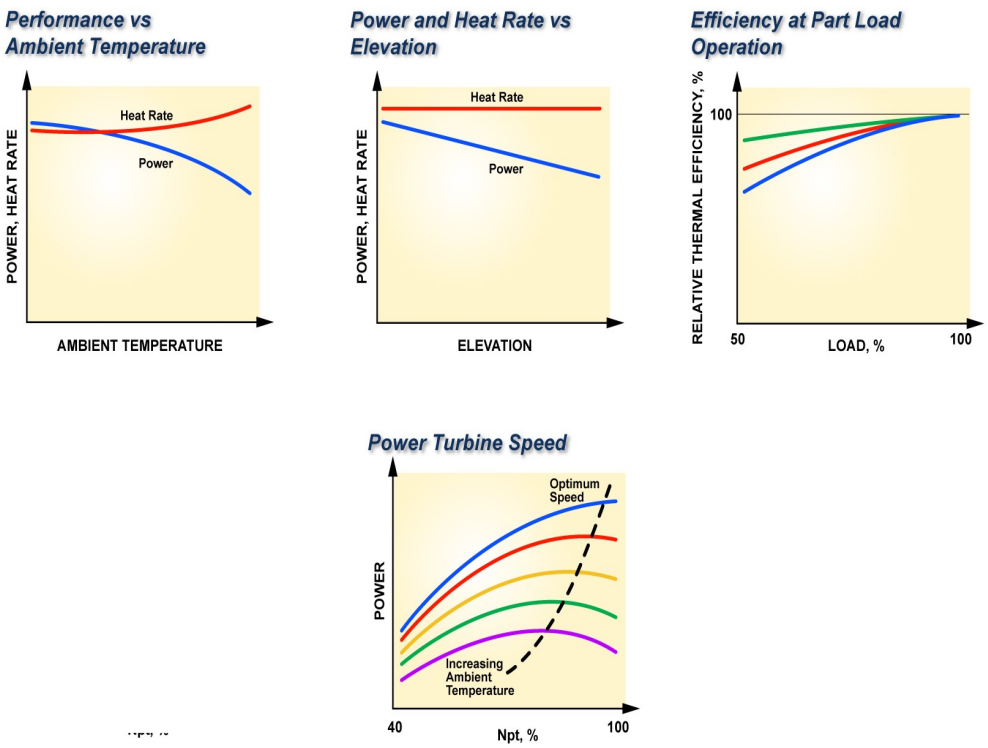

Figure 24: Gas Turbine Performance Characteristics

The humidity does impact power output, but to a small degree (generally, not more than 1 to 3%, even on hot days). The impact of humidity tends to increase at higher ambient conditions.

Lower ambient pressure (for example, due to higher site elevation) will lead to lower power output, but has practically no impact on efficiency. It must be noted that the pressure drop due to the inlet and exhaust systems impact power and efficiency negatively with the inlet pressure drop having a more severe impact.

Gas turbines operated in part load will generally loose some efficiency. Again, the reduction in efficiency with part load is very model specific.

Gas Turbine Control

Process control with two shaft gas turbines is accomplished by varying the speed of the driven equipment. If the process variable to be controlled (for example flow, or discharge pressure) does not meet the set point, the gas turbine power output is adjusted, which will lead to a change in equipment speed. Using single shaft machines where the speed range is limited may require additional control capability for example using recycle or throttle valves.

Drivers for Refinery Compressors – Electric Motors

Since this tutorial is primarily about turbomachinery, electric motor drives will not be covered in any detail. However, extensive information about installation, operation, and maintenance considerations of electric motor drives in oil and gas service can be found in the Application Guideline for Electric Motor Drive Equipment for Natural Gas Compressors [Nored et al. (2009)]. Also, electric motor drives are not quite as common in refineries as steam turbines (similar to gas turbine drivers). This is because of the complexities of installing high voltage and high current electric equipment in a hazardous are location with flammability, ignition source, and explosion risk classifications. Specifically, electric motor drivers in refineries usually have to meet National Electric Code NFPA 70 Class1, Div. 1 requirements which can be complex, costly, and unpractical for some applications.

Other Considerations for Turbomachinery in Refineries

Materials, Claddings, and Coatings

Corrosion of metallic components is a major factor of inefficiency in the refining process. Because it leads to equipment failure, it is a primary driver for the refinery maintenance schedule. Corrosion occurs in various forms in the refining process, such as pitting corrosion from water droplets, embrittlement from hydrogen, and stress corrosion cracking from sulfide attack. From a materials standpoint, carbon steel is used for upwards of 80 percent of refinery components, which is beneficial due to its low cost. Carbon steel is resistant to the most common forms of corrosion, particularly from hydrocarbon impurities at temperatures below 205 C, but other corrosive chemicals and environments prevent its use everywhere. Common replacement materials are low alloy steels containing chromium and molybdenum, with stainless steels containing more chromium dealing with more corrosive environments. More expensive materials commonly used are nickel, titanium, and copper alloys. These are primarily saved for the most problematic areas where extremely high temperatures and/or very corrosive chemicals are present.

The processes gases involved with refinery compressors can be highly corrosive. The corrosive constituents can be inherent to the process gas itself or can be unintentionally included in the process. There are numerous constituents that can be included in the process gas that can lead to corrosion, particularly in the presence of H_2O. API 617 lists some examples as hydrogen sulfide (H_2S), amines, chlorides, cyanide, fluoride, naphthenic acid, and polythionic acid. The constituent that is most frequently cited as cause for concern is H_2S. In fact, clauses 4.5.1.6 – 4.5.1.8 in API 617 cover H_2S and sulfide stress cracking. If any H_2S is reported in the gas composition, requires that the materials of construction be in line with NACE MR 0103-2007, NACE SP 0472-2008, or if specified, NACE MR 0175-2008 in order to limit the risk of failure by sulfide stress cracking.

Hydrogen recycle compressors provide a good example of a case where unintentional constituents could be introduced into a compressor. In a very high level view of hydrotreating, hydrogen reacts with Nitrogen, Oxygen, Sulfur and Chlorine impurities in the feed to form NH_3, H_2O, H_2S and HCl. Ideally, these are dealt with by scrubbers and/or separators upstream of the recycle compressor, but it is not uncommon for these systems to fail to remove all of these reaction products before they enter the compressor. Ammonium chloride and ammonium bisulfate are often found to condense out of the process gas and end up depositing on the compressor surfaces. Figure 25 shows now easily the formation of ammonium chloride occurs when ammonia and and hydrogen chloride come in contact. Besides creating fouling concerns which restrict the process gas flow, the deposits can cause severe pitting corrosion which act as initiation sites for fatigue cracks. The chlorides often contained in these deposits are corrosive even to stainless steel, which presents some challenges to designers. It is counter intuitive, but in hydrogen recycle applications, the use of carbon steels is actually preferred over stainless steels in some instances. The reason for this is that despite generally being considered highly corrosion resistant, some stainless steels, such as AISI 304 and 316, are particularly sensitive to chlorides and are prone to stress corrosion cracking.

$$HCl_{(g)} + NH_{3(g)} \rightarrow NH_4Cl_{(s)}$$

Figure 25: Ammonia Chloride Foundation

The deposits in compressors for refinery compressors can also tightly adhere to the inside surfaces of the casing creating the perfect environment underneath them to support heavy corrosion. Over time, this corrosion can become significant enough to compromise the integrity of the casing. Staying with the hydrogen recycle example above, these deposits are corrosive to carbon and stainless steels, and stainless can actually be susceptible to stress corrosion cracking in the presence of chlorides. The most commonly selected alloys for high chloride applications are nickel based, however, they are cost prohibitive for such large parts. The alternative to using raw materials made entirely from nickel alloys is to utilize a low cost carbon steel as the structural base material and then apply a thin layer of the corrosion resistant nickel alloy in the areas which require protection. Inconel 625 (UNS-N06625) is commonly used due to its availability, weldability, and resistance to chloride corrosion. There are a number of methods that can be used to apply an Inconel overlay to a centrifugal compressor casing, including standard welding techniques. One effective method is to use Electro Slag Welding (ESW) which deposits a strip of material up to 60mm in a single piece (Figure 26).

Figure 26 – Electro Slag Welding (ESW) of Strip on Carbon Steel Compressor Flange Face

The internal components of the centrifugal compressor, which include the rotor and the stationary diaphragms, present different challenges. The rotating components are typically manufactured from low alloy steel or martensitic stainless steels due to the applied operational stresses, and these often do not have the required corrosion resistance for refinery applications. The complex geometry of these components does not permit a cladding process, and the physical size of the components would make manufacturing from a nickel-based alloy extremely costly. While this can effectively prevent corrosion, this does not stop the issue of foulant build-up on the compressor internals.

In these cases, an effective measure of preventing both corrosion and fouling build-up is by application of a coating to the internal components. The first prerequisite of any effective anti-fouling coating is that it must effectively prevent corrosion of the substrate. Standard anti-fouling coating for centrifugal compressors utilize a base coat for corrosion protection and a non-stick top coat such as PolyTetraFluoroEthlyene (PTFE or commonly known as Teflon). While these coatings are often suitable for hydrocarbon processing, the basecoat in these coating systems can have an accelerated corrosion reaction with the chlorides in the process gas. Other coatings such as Electroless Nickel can be used to help prevent corrosion in many applications. This coating is a hard and durable which allows it work well in cooperation with a liquid injection to help prevent fouling.

Figure 27: Ammonium Chloride Fouling in a Hydrogen Recycle Compressor

Figure 28: Pitting Corrosion in 17-4 PH Stainless Steel Underneath Foulant Build-up in Figure 27

Figure 29: Compressor Rotor with a PTFE Topcoat

Figure 30: Compressor Rotor with Electroless Nickel Coating

API Standards

There are over 300 relevant API standards for machinery in refinery service. Turbomachinery in refineries are usually required to strictly adhere to American Petroleum Institute (API) standards. The most relevant of these from a turbomachinery perspective in a refinery are API 612 – Steam Turbines, API 614 Lube Oil Systems, API 616 Gas Turbines, API 617 Centrifugal Compressors, API 618 Reciprocating Compressors, API 670 Machinery Protection. Other standards, both API and non-API standards, may apply as required. The National Electric Codes (NEC) and its sections on hazardous area classification (NFPA 70) are an integral part of API and are a strict requirement for machinery in refinery service. Several presentations and tutorials are available to cover these in detail [See Brun et al. (2006)] so they are not further discussed herein.

Transient and Steady State Operations

Refineries often operate in a quasi-steady-state operation. Because many processes require significant startup time and complex sequences, the refining operations are often planned out in the form of campaigns that can last from several months to over a year, usually with month-long planned outages for maintenance, repair, cleanup, and prepping for the next campaign in between. This leads to the requirement that all equipment involved in a specific operational campaign needs to be highly reliable and rugged as to not cause a system or process upset that could shut down the entire campaign requiring a lengthy shut-down, prep-time, and restart of the plant. As such, refinery equipment is often not selected based on highest efficiency or cost requirements but on reliability, availability, ease of repair/maintenance, and ruggedness. Most refinery operators work closely with the machinery OEM's to coordinate repairs, overhauls, and maintenance to reduce risk and achieve highest equipment reliability.

SUMMARY

A petroleum refinery converts raw untreated crude oil into many consumer and industrial hydrocarbon products, including gasoline, heating oil, lube oil, and feedstocks for the petrochemical industry. There are a large number of turbomachinery applications in refineries ranging from pumping and compression to mechanical drivers and power generation. This tutorial covered the basics, applications, and operation of compressors, expanders, steam turbines, and gas turbines in some complex refinery applications. Operational and technical details of turbine and compression applications such as gas boost, hydrogen recycle, reforming, wet-gas compression, steam turbine drivers, and gas turbine drivers were discussed. Topics covered refinery process fundamentals, turbomachines in refinery applications, materials, design conditions, and examples of special operational considerations in refinery service.

FIGURES

Figure 1 - Typical Refinery Process with Distillation Column
Figure 2 - Turbomachinery Applications in Refinery Service
Figure 3 - Hydrotreater Unit BP Grangemouth, UK (Courtesy of BP)
Figure 4 - Hydrotreater Compressor
Figure 5 - Fluid Catalytic Cracking Unit Process Diagram
Figure 6 - Vertically Split Hydrogen Recycle Compressor Driven by Steam Turbine
Figure 7 - Delayed Coking Process
Figure 8 - Alkylation Plant (Courtesy of Motiva)
Figure 9 - (From Compression Machinery for Oil and Gas)
Figure 10 - Wet Gas Separators
Figure 11 - Steam Turbine Driven Wet Gas Coker Compressor (F108012)
Figure 12 - Axial Compressor for Main Air Blower Service
Figure 13 - STRATCO® Effluent Refrigeration Alkylation Process (Branzaru, 2001)
Figure 14 - Alkylation Refrigeration Compressor
Figure 15 - Integrally Geared Compressor Layout (Courtesy FS-Elliott)
Figure 16 - Integrally Geared Centrifugal Instrument Air Compressor (Courtesy FS-Elliott)
Figure 17 - Compressor and Turbine Speed vs. Efficiency Curves
Figure 18 - Allowable Stress vs. Temperature for Cr-Mo Steel
Figure 19 - Rotor Fouling
Figure 20 - Stator Fouling
Figure 21 - Entrapped Steam Volume
Figure 22 - Typical Industrial Gas Turbine
Figure 23 - Gas Turbine Fuel Sources
Figure 24 - Gas Turbine Performance Characteristics
Figure 25 - Ammonia Chloride Foundation
Figure 26 - Electro Slag Welding (ESW) of Strip on Carbon Steel Compressor Flange Face
Figure 27 - Ammonium Chloride Fouling in a Hydrogen Recycle Compressor
Figure 28 - Pitting Corrosion in 17-4 PH Stainless Steel Underneath Foulant Build-up in Figure 27
Figure 29 - Compressor Rotor with a PTFE Topcoat
Figure 30 - Compressor Rotor with Electroless Nickel Coating

REFERENCES

Barletta, T. and Golden, S. W., 2013, "Centrifugal Compressor Operations," Process Consulting Services, Inc.

Branzaru, J., 2001, "Introduction to Sulfuric Acid Alkylation Unit Process Design," STRATCO, Inc.

Nored, M. et al, 2009, "Application Guideline for Electric Motor Drive Equipment for Natural Gas Compressors", Gas Machinery Research Council, Southwest Research Institute

Brun, K. et al, 2006, API Specification Review for Gas Turbine Driven Turbocompressors" Turbomachinery Symposium 2006

ACKNOWLEDGEMENTS

Elliott Group: David Saletta, Derrick Bauer, Jonathan Sutter
FS-Elliott: Alex Curtin