ASIA TURBOMACHINERY & PUMP SYMPOSIUM
12-15 MARCH 2018
SUNTEC SINGAPORE

MODIFICATION OF OIL BRAKE ON CRYOGENIC EXPANDER FOR IMPROVED EFFICIENCY UNDER VARYING LOAD CONDITIONS

Trevor Mayne
Lead Machinery Engineer
Qenos Olefins Pty Ltd,
Melbourne, Victoria, Australia.

Trevor is the Lead Machinery Engineer for the Olefins Refinery. He has worked with rotating equipment covering Turbines, Compressors and pumps in the Olefins Refinery as well as large Extruders, Mixers, Driers and materials handling equipment in the Plastics and Synthetic rubber plants over the last 30 years. He has held positions in reliability as well as Field Maintenance both at the Altona plant and in Saudi Arabia with Exxon Mobil.
He has a Bachelor of Engineering with specialization in Mechanical Engineering from RMIT(Royal Melbourne Institute of Technology)

Chris Bowly
Senior Engineering adviser
Process Consultants Pty Ltd,
Melbourne, Victoria, Australia.

Chris Bowly is a senior adviser with engineering firm Process Consultants, based in Melbourne, Australia. Previously, Chris was Lead Process Design Engineer at Qenos Altona ethylene plant for 19 years and has 37 years experience in the petroleum, chemicals, hydrocarbons and metals industries. He gained broad experience in Operations, Maintenance and Management roles prior to joining Qenos.He has a Bachelor of Chemical Engineering (1st Class Honours) from University of Queensland and is a Chartered Engineer / Member of IEAust.

ABSTRACT

Modification of Oil Brake on cryogenic expander for improved efficiency under varying load conditions

Investigation into the operation of a 200kW brake oil expander in a 1970's vintage ethane cracker revealed that maximum gas throughput was significantly below design and that the gas throughput varied significantly in normal operation. Expander refrigeration duty was thus below design, and substantial production losses accrued due to the inability to achieve the low cryogenic refrigeration temperatures at the original design point and as plant throughput varied.
The oil brake controls were redesigned based on a detailed understanding of the operation of both expansion turbine and the centrifugal pump brake. The OEM supplied fixed orifice was replaced with an engineered hydraulic self-regulating control block. Only proven industrial hydraulics components were used to maximize reliability and minimize cost.
The control block was bench tested separately from the expander after manufacture to allow the control block to be accurately pre-set before installation in the field.
Commissioning was trouble free.
The result is a robust and reliable oil brake control that has increased turbine efficiency to be better than 85% of the original BEP at all times. Analysis of the impact of the resultant increased refrigeration duty indicates that this project will have a payback time of less than 1 year.

INTRODUCTION

Turbo-expanders provide high value refrigeration duty in cryogenic service. Typically, they are close coupled with turbo-compressors to absorb the developed work and improve overall pressure ratio.
Small turbo-expanders (less than 250 KW) are often configured with an oil brake to absorb the developed work for reasons of simplicity. An oil brake typically takes the form of a low efficiency centrifugal pump on a common shaft with the expansion turbine. Oil brake controls can be rudimentary, typically a fixed orifice or a manually adjustable flow restriction at the discharge of the centrifugal pump.
To achieve the best refrigeration duty from a turbo-expander the design and selection of the expansion turbine wheel is optimizedfor a specific operating speed. To allow a wider operating range turbo-expanders are typically fitted with manually or automatically adjustable inlet guide vanes (IGV's).
Best efficiency point (BEP) of a chosen expansion turbine wheel occurs at design speed, where the ratio of inlet blade tip velocity to inlet gas velocity leaving the upstream nozzle throat matches the chosen turbine blade design.
Investigation into the operation of a 200kW brake oil expander in a 1970's vintage ethane cracker revealed that the BEP was never achieved. Indeed, turbine efficiency varied over the range 60-90% of the BEP efficiency. Power extraction was thus below design, the expansion turbine exhaust gas was significantly warmer than design and the high value cryogenic refrigeration duty was not achieved.
As a result of this, optimum ethylene recovery in the cryogenic separation drums was not achieved and the extent of the losses was magnified as plant throughput varied.
A close investigation into the expanders operation revealed:
- Design mass flow rate to the expansion turbine was never achieved
-There was a repeatable relationship between the mass flow through the turbine and the turbine speed
-There was a repeatable relationship between the mass flow through the turbine and the turbine efficiency.
It seemed likely from the data that BEP could be achieved if the mass flow through the turbine could be increased to reach the design value.
The operational situation for the ethane gas cracker dictated that mass flow presented to the turbine was always below design. In fact, the mass flow varied significantly in normal operation, due to fluctuations in feed supply to the cracker.
It was proposed that the expander be redesigned so that the

Copyright© 2018 by Turbomachinery Laboratory, Texas A&M Engineering Experiment Station

efficiency approached much closer to the BEP at mass flows significantly below design and further, so that the efficiency did not fall away as significantly as mass flow reduced. It was conjectured that increasing turbine speed at any mass flow would increase the turbine efficiency and achieve this objective. A redesign of the oil brake control to facilitate a flatter relationship between turbine speed and turbine gas mass flow was conceived as the means of achieving this outcome.

SYSTEM DESCRIPTION

The expander under study is part of the cracker chill train. The chill train uses propylene and ethylene refrigeration circuits, as well as recovered cold energy from product streams to chill and condense the cracked gas to -100 degC , enabling separation into an ethylene rich liquid and a hydrogen rich vapour.
The liquid is processed to recover polymer grade ethylene for sale. The only use for the hydrogen rich vapour at this plant is as furnace fuel.
At this temperature the hydrogen stream contains an appreciable concentration of ethylene. The value of ethylene in the fuel system is very low compared to the value of the ethylene as polymer grade.
The expander provides refrigeration at temperatures of approx-145 deg C, which is utilized in an aluminum plate-fin heat exchanger E-734 (refer Figure1) to chill and condense the hydrogen rich vapor to temperatures approaching -130 deg C , creating in D-735 additional ethylene rich liquid for recovery and a reduced quantity of hydrogen rich gas. The hydrogen rich gas from D-735 is firstly reheated and then expanded from ~30bar (450psi) to ~8bar (120psi) to provide the refrigeration duty.
The expander actually has two turbines, each direct coupled with an oil pump as the brake (Figure2). The OEM supplied oil brake control was a fixed orifice in the discharge of the pump with a manually adjusted "speed" control needle valve which had historically always been in the fully closed position for maximum speed. The turbines are also each provided with adjustable Inlet Guide Vanes (IGV's), which are moved automatically to control the inlet pressure to the turbine at the desired value of ~30bar. There is capability to move the inlet guide vanes independently of one another.

INVESTIGATION OF PLANT PERFORMANCE

The concentration of ethylene in the reject hydrogen stream is a strong function of the temperature in D-735 as per Figure3, which overlays plant sample data on thermodynamic simulation relationship. The original design operation temperature for D-735 was -130 deg C.

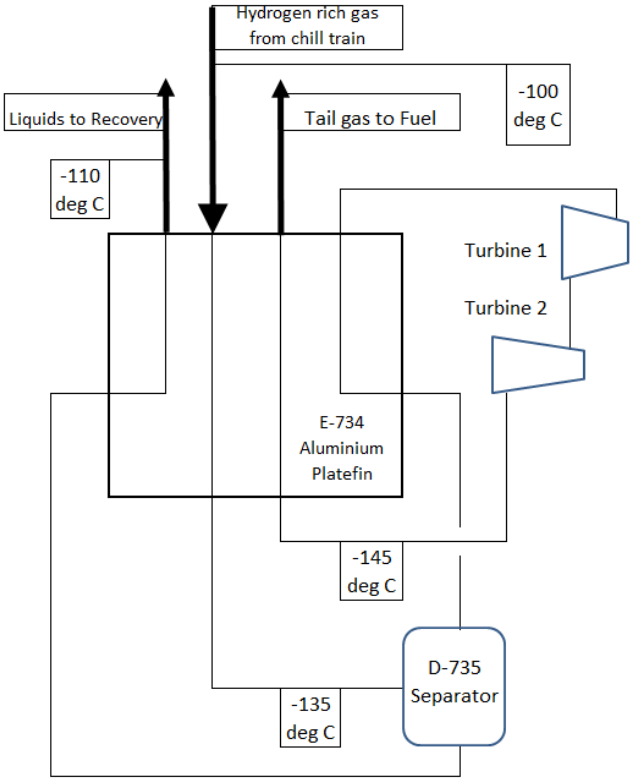

Figure 1 : Platefin Schematic

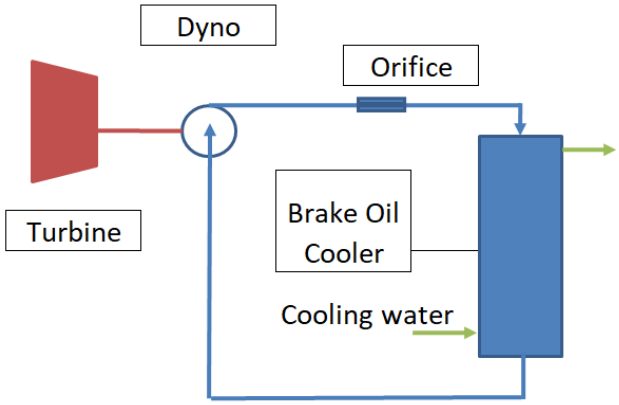

Figure 2 – Oil Brake Schematic

Copyright© 2018 by Turbomachinery Laboratory, Texas A&M Engineering Experiment Station

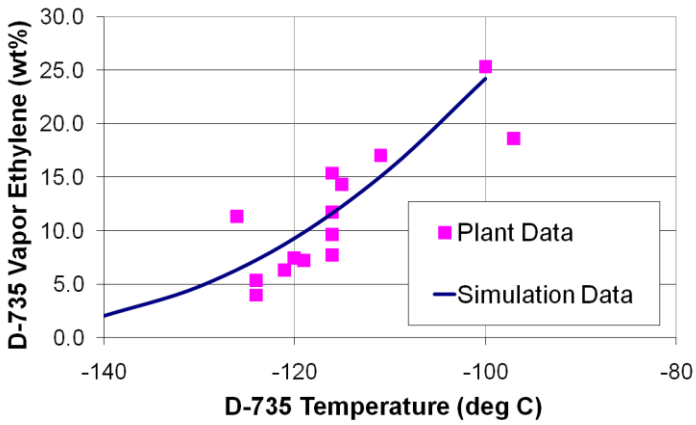

Figure 3 – Effect of temperature on ethylene loss

The effectiveness of the expander refrigeration at achieving the desired low temperatures is illustrated in Figure 4, where the D-735 temperature is resultant from the temperature decrease (delT) that occurs as the reject hydrogen flows through the two turbines in the expander unit. Figure4 is a year's worth of hourly average plant data. The broad spread of D-735 temperature is an indicator of the potential for recovering ethylene to product by improving the delT. Note that the X axis is the combined delT across both the turbines.

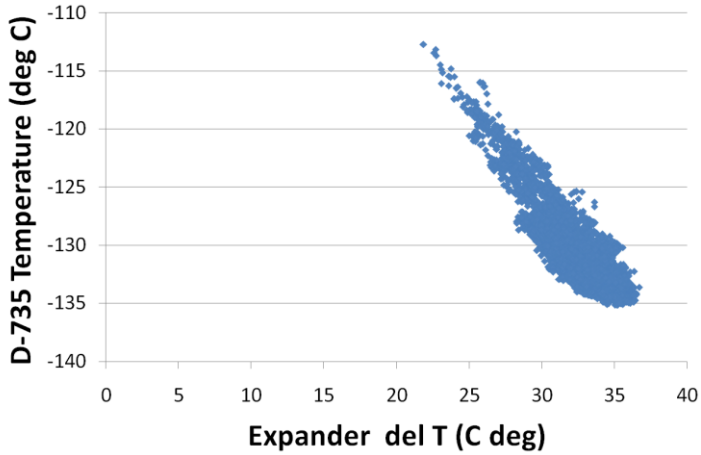

Figure 4 – Impact of expander on D-735 Temperature.

The delT of the expander is a proxy for the efficiency of the expansion turbines wheels to transfer kinetic energy of the gas to shaft work. The higher the efficiency, the more power the turbine extracts per unit mass of gas and the colder becomes the exhaust temperature. Figure 5 illustrates the relationship between delT and mass flow of gas through the turbine. Again, this is a year's worth of plant data, and it is overlaid on the projected performance supplied by the OEM (red line).

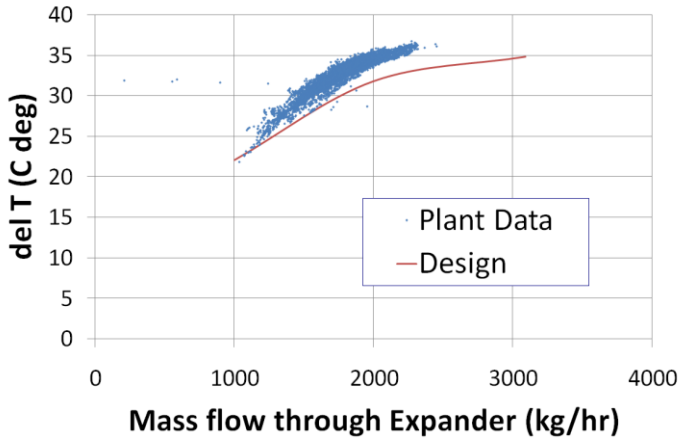

Figure 5 – "Efficiency" of expander as function of gas flow

It is clear that the range of actual plant gas flow available to the turbines is significantly below the design flow of 3150 kg/hr at the right hand edge of the red line in Figure 5.

The delT in Figure 5 is higher than the design curve, which may be indicative of calibration errors in the temperature indicators, or it may indicate conservatism on the part of the OEM.

Figure 6 is a noteworthy plot, aligning as it does with our conjecture that increasing turbine speed would achieve our goal of increasing delT and decreasing D-735 temperature. Note that the X axis is the sum of speeds of the two turbines, while the Y-axis is still the total delT of the two turbines. We find this plot is cleaner than looking at the turbines individually. The OEM provided only one data point for this plot.

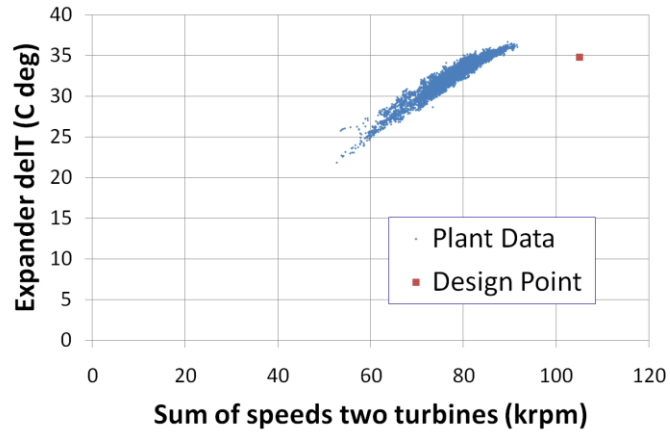

Figure 6 – "Efficiency" of expander as function of speed

Copyright© 2018 by Turbomachinery Laboratory, Texas A&M Engineering Experiment Station

Comparing Figure 5 and Figure 6, there is an obvious relationship between gas flow and turbine speed.

AERODYNAMIC THEORY – WHY IS EFFICIENCY RELATED TO SPEED?

Turbine design is a complex, well developed merge of engineering and physics principles. The key objective of a turbine is to transfer fluid energy into shaft work. Turbines typical do not consume mass or chemically change the fluid that passes through them so to achieve their basic objective they rely on using kinetic energy of the fluid and changing its momentum. To change the momentum of the fluid in a turbine and produce shaft work requires the fluid to firstly achieve as high as possible kinetic energy, then have this accelerated fluid directed against a physical surface attached to the shaft (a blade) and allow it to impart this energy to the shaft. This can be done either in an impulse stage, a reaction stage or a combination of the two. The design decision taken on the accelerating nozzle and type of blade "shape" where this momentum change takes place is complex but it must aim to achieve a ratio of blade speed to fluid speed that will deliver the most efficient transfer of kinetic energy into momentum change that can result in shaft work.

The simple reason why efficiency is related to turbine speed is that a turbines rotating wheel(s) diameter, the shape and flow path dimensions through the blades where the fluid travels are all fixed once a turbine is fabricated. If a turbines speed varies from the BEP that its physical arrangement was designed for then the ratio of blade velocity to fluid velocity is not optimal and efficiency is altered as a consequence.

The first point to examine on how this ratio can be pushed from its optimal point is if there is an excessive reaction load/over braking on the turbines shaft which is not matched to the total energy being supplied in the fluid flow to the turbine. This will obviously result in the Turbine shaft and wheel/blade velocity not reaching the designers targeted velocity.
The second point to examine relates to how the Fluid velocity that is presented to the turbines blades can vary. If the mass flow to the inlet of the turbine nozzles reduces and the nozzle throat area remains constant the resulting fluid velocity leaving will be reduced and then impact directly on this ratio of fluid velocity to blade speed.
The third aspect that needs consideration is not only the speed of the turbine and the speed of the Fluid but it is its direction. The alignment of the fluid path accelerating from the nozzle area directed onto the rotating turbine shaft blades provides the point at which optimum energy transfer can occur. Moving away from this alignment by variation in speed of the shaft or fluid velocity will negatively affect the overall efficiency.

An interesting point to consider for turbo expanders and their turbines is the effect IGV's have to flatten out a turbine stages delivered efficiency. Inlet guide vanes by name would suggest that they are predominately allowing the alignment or guiding of the direction of the fluid that is accelerating at the turbine wheels blades to be best positioned. This is correct however a more holistic way of considering what the IGV's are actually achieving lies in their ability to be a variable nozzle throat. This ability to vary nozzle throat area allows changes in fluid velocity to be minimized as mass flow rate changes. Combining this with flexibility in how the turbine is being braked over the operating range will keep the locus of fluid velocity to blade velocity ratio as optimal as possible.

OBJECTIVES OF A RE-DESIGN FOR AN IMPROVED EXPANDER

The business was targeting low capital projects to improve profitability. Based on the aerodynamic theory, we believed that we could design a low cost change to the expander utilizing the existing aero end, but modifying the brake to increase speed
The operational history of the expander was that it had operated for almost 20 years without any significant mechanical maintenance and with excellent availability. Downtime was very costly in terms of lost ethylene production, and the business wished to retain this high availability/low maintenance cost.
As a result, we specified that a re-design of the expander should meet the following criteria

- Modify only the brake components
- Turbine speed to be close to design speed across the normal range of gas mass flows
- Turbine overspeed to be virtually impossible
- Reliability to match the existing design
- Capability for on-line adjustment, to cater for uncertainty in brake performance characterisation
- Ability to revert back to a fixed orifice design if we were wrong
- Lowest practical capital cost

DESIGNING AN IMPROVED EXPANDER BRAKE CONTROL

We had long understood that the relationship between gas flow and turbine speed was due to the simple design of the oil brake control (Figure 2). Each oil brake is a pump with low hydraulic efficiency, with a restriction orifice inside the pump casing at the discharge port which sets the "brake tension".
The orifice size in both brakes was changed from the OEM design early in the life of the unit when both turbines were found to be operating at low speed. The orifices were reduced

Copyright© 2018 by Turbomachinery Laboratory, Texas A&M Engineering Experiment Station

in area by a small amount to reduce the power draw of the pumps at any given speed, so allowing a higher speed for any given gas flow. The reduction in area was an educated guess, which turned out to be too conservative. The impact on operation was barely noticeable. Due to the downtime required to change the orifices, there was no follow-up change.
Another reduction in orifice area would result in increased speed (and efficiency) at every instance of mass flow, but would require an improved design approach (not a guess) and would not solve the problem of low speed and low efficiency at low flow.
A better solution would be to have a small orifice for small gas mass flows and a larger one for large gas flows. A variable area orifice, akin to a back pressure regulator, seemed to be the obvious solution. The ideal design would result in speed becoming independent of gas mass flow.
A reliability concern that we recognized early in the design process was the possibility of pump cavitation arising from increased average speed and increased brake oil temperatures. The history of the operation with the simple brake was that the extent of cavitation was sufficiently minor to allow for long service life of the pump. We needed to have some capacity to estimate the potential for cavitation to increase and thus shorten pump life.
The process design problem for a back pressure regulator thus became to

- specify a flow/pressure characteristic for a back pressure regulator
- estimate the resultant relationship between gas mass flow, turbine speed and turbine power
- Estimate the resultant increase in brake oil temperature to feed in to the cavitation assessment

This required a sound knowledge of the pump performance curves (head and efficiency vs. flow). Unfortunately this was not available.

ESTIMATION OF PUMP PERFORMANCE CURVES

The OEM provided a single head-flow curve for each pump at design speed, but no power curve, nor guidance for extrapolating the curves to other speeds. The OEM did not provide a data sheet for the orifices.
We estimated the system curve for each pump and orifice combination using standard similarity relationships for off-design speeds and a square edged orifice Cd=0.62, yielding the following curves for Unit 1 as an example (Figure 7).

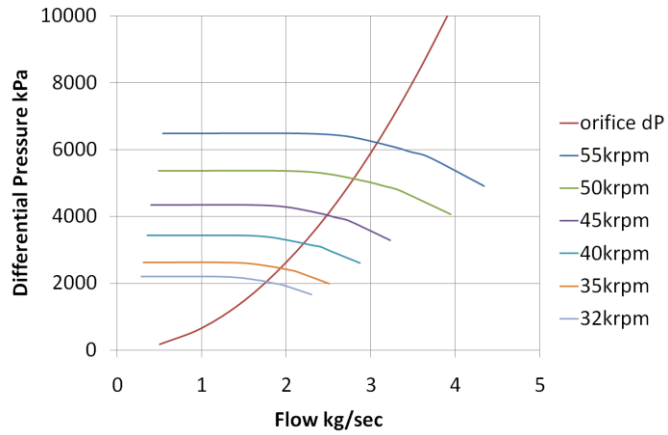

Figure 7 – Unit 1 Brake System curve

The intersection of the curves provided an estimated locus of operating points of the brake, with flow determining pump head and hence required speed.
Validation of the locus of operating points in the field was not possible, due to the location of the orifices inside the pump casings and lack of flow meters on the brake oil.
The OEM provided a single Design Point from which it was possible to calculate a single efficiency datum. Reverse engineering for other operating points was deemed possible through estimation of brake power from the gas side enthalpy change.
Plant data provided a smooth curve of gas turbine power (equal to brake power) as a function of turbine/brake speed (Figure 8). Correspondence with the OEM datum seemed good.

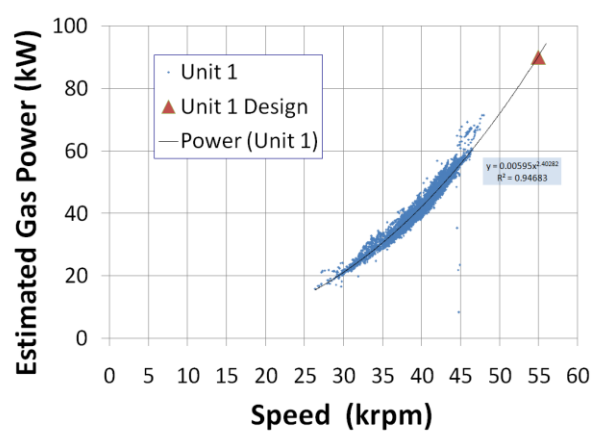

Figure 8 – Unit 1 Power curve

These two curves allowed a calculation of the hydraulic efficiency of the pump along the estimated locus of brake operating points. Figure 9 shows those calculated points plotted against the pump flow.

Copyright© 2018 by Turbomachinery Laboratory, Texas A&M Engineering Experiment Station

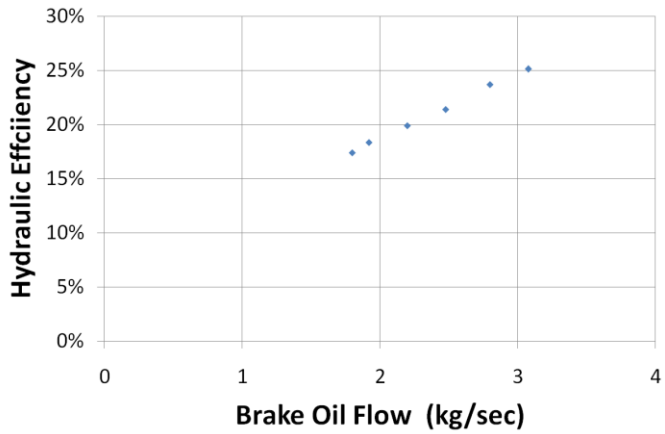

Figure 9 – Unit 1 Hydraulic Efficiency curve

The design question was how to extrapolate from this curve to a very different operation of the brake, where the same wide range of power is absorbed through a much narrower range of speed. Utilizing mass flow through the pump as the determinant for efficiency seemed reasonable. This design of pump had more in common with an in-line mixer or homogenizer than a typical transfer pump. The impeller is deliberately designed to impart mixing energy to the fluid, so at lower flow through the pump, a higher proportion of the input power will appear as heat, not work.
A composite system and power curve was developed for a back pressure regulator intended to meet the requirement to keep speed below the design value of 55krpm (Figure 10).

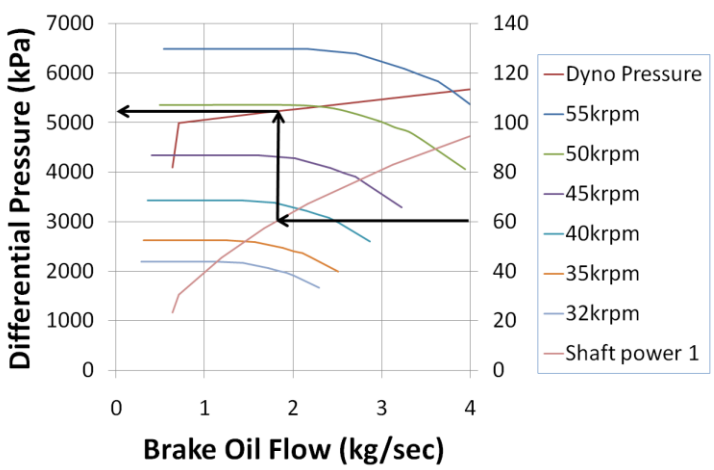

Figure 10 – Proposed Composite Brake Curves

In Figure 10, the backpressure regulator curve (red) is markedly different to that from a simple restriction orifice. It is assumed that, at low flows, there will be some leakage (in fact we design it in). The locus of operating points can be calculated and brake power (pink curve) at each point calculated using the efficiency derived from flow. The arrows illustrate how to pick out the power /speed relationship.
It is instructive to compare the re-designed brake response to input power with the original brake,

Figure 11 illustrates how the brake flow will respond. The original design has the flow initially increasing rather rapidly as power is increased from zero, keeping the turbine speed low. The re-designed brake maintains a much lower flow at low power, demanding higher speed.

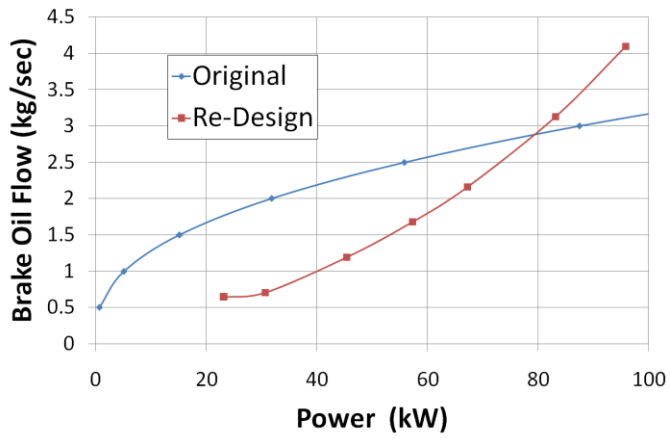

Figure 11 – Brake Flow Response to Power

Figure 12 illustrates the temperature rise experienced by the brake oil in response to applied power. As expected , the re-designed brake absorbs the input power by adding more temperature to the oil. This information was used to assess the likelihood of increased cavitation , which turns out to be low.

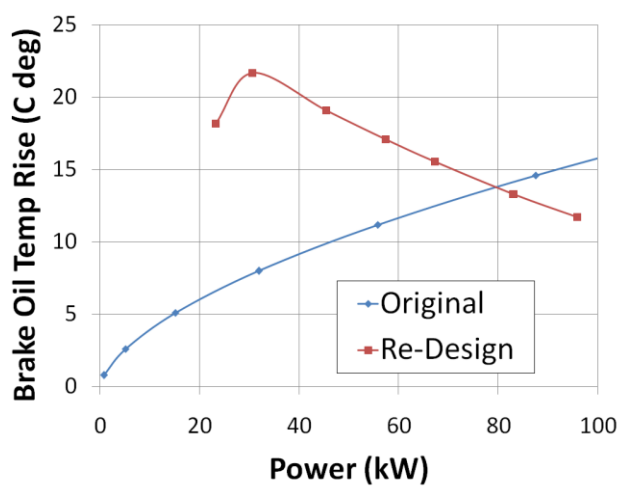

Figure 12 – Brake Temperature Response to Power

Copyright© 2018 by Turbomachinery Laboratory, Texas A&M Engineering Experiment Station

Bear in mind that, for any given gas flow to the expander, the brake input power should be increased for the re-designed brake relative to the original due to increased turbine efficiency.

MECHANICAL DESIGN PRINCIPLES FOR REDESIGN

- Reliability

Any redesign of the original oil brake hardware components would need to meet/exceed the reliability of the proven and simple fixed orifice and manual speed adjustment needle valve system. Any redesign must incorporate component redundancy that can allow online external isolation and the system to be reverted back to a fixed orifice design.

- Online adjustability and wide operating range

The original manual needle valve adjustment had since commissioning always been placed in a completely "closed" positon with all back pressure being taken by the fixed orifices.

There was no on-line means available to determine if there were any underlying issues with this needle valve sealing or not seating correctly. Any "manual adjustment" would also require constant operator interaction for any expander feed rate changes and as such the redesign scope would remove this from the original oil brake housing design. The lack of certainty in the actual performance of the brake oil system from the local field instrumentation also required a new design to be capable of "online" tuning and adjustment, and also have a wide operating range.

- Over speed protection

The current fixed orifice design and the inability for the expander gas power to drive the oil brake to design speeds meant that it had an inherent ability to over brake. A redesign needed to provide a level of over braking capability both for the initial start-up and commissioning phases and also in the event of an online component failure that rendered a low oil flow/low brake case.

- Constructability and Components

The selected hardware for the brake oil self-regulating back pressure control needed to be such that it was constructed as a single hydraulic manifold block with proven commercially available pressure and fluid compatible subcomponent hardware. A common manifold block with all elements externally accessible would be required to allow it to be directly mounted onto the existing oil brake housing.

- Factory testing

Based on the above design points the final design basis also required that the new hardware had to be designed and constructed in a way whereby it could be extensively factory tested under comparable plant operating conditions.

REDESIGNED BRAKE OIL CONTROL HARDWARE AND SCHEMATIC

A collaborative approach with an established local hydraulics component supplier was undertaken which resulted in a redesign and hydraulic schematic and hardware components as follows:

- Two (2) manually adjustable orifices that can be locked in position to replicate the current fixed orifice design. (100% redundancy)
- Two (2) pilot operated self-adjusting dynamic back pressure regulators. Primary unit being set to control expander speed range and secondary unit being set to come into play in an over speed condition and act to over brake. Each unit to have an external manual lock out capability such that any failure modes that could create an over braking condition could be addressed online and the unit could be isolated from the hydraulic circuit.
- A common hydraulic block manifold with all subcomponents assembled externally and adjustable externally from the block. Provision for local gauge and online data logging connection for monitoring during factory testing and site commissioning.
- All components selected from standard hydraulic sub components that have proven field application and service.
- A compact design that would be supported off the original oil brake housing assembly with all pressure impulse line tapping being shortest possible runs and capable to be purged in service.

Copyright© 2018 by Turbomachinery Laboratory, Texas A&M Engineering Experiment Station

SYSTEM DESIGN PARAMETERS	
P1 INLET PRESSURE	80 - 85 BAR GAUGE
P2 OUTLET PRESSURE	17 -20 BAR
OIL FLOW RATE RANGE	50 - 300 LPM
OIL OPERATING TEMPERATURE	40°C
OIL TEMPERATURE VARIATION	3°C
OIL TYPE & GRADE	ISO VG 46, MINERAL OIL (MOBIL DTE 25)
MAX BACK PRESSURE DRAIN (T)	1 BAR GAUGE
SEAL MATERIAL	NBR / FKM
TARGET OIL CLEANLINESS	ISO 17/15/12
TESTING P.Q PERFORMANCE CURVE	PLOT GRAPH
TESTING ENDURANCE MAX FLOW AND PRESS.	8 HOUR
TESTING STATIC HYDROTEST (MANIFOLD)	200 BAR

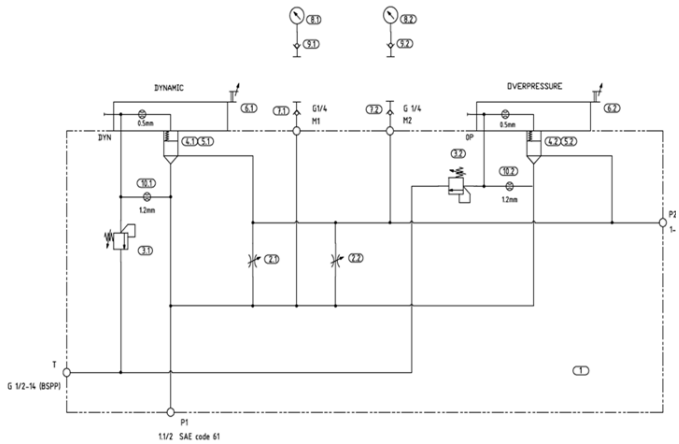

PORT TABLE			
PORT ID	DESCRIPTION	TYPE	SIZE
P1	OIL INLET	SAE CODE 61	1.1/2"
P2	OIL OUTLET	SAE CODE 61	1.1/2"
T	OIL DRAIN	ISO 228 (BSPP)	G1/2
M1	OIL INLET GAUGE	ISO 228 (BSPP)	G1/4
M2	OIL OUTLET GAUGE	ISO 228 (BSPP)	G1/4

ITEM ID	QTY	DESCRIPTION
1	1	MANIFOLD (GGG) DUCTILE IRON. 65 45 12 DURA BAR
2	2	NEEDLE VALVE - SCREW IN CARTRIDGE
3	2	RELIEF VALVE - SCREW IN CARTRIDGE
4	2	SLIP-IN CARTRIDGE INSERT
5	2	SPRING 1 BAR
6	2	SLIP-IN CARTRIDGE COVER - STROKE ADJUSTER
7	2	TEST POINT
8	2	PRESSURE GAUGE
9	2	1620 GAUGE ADAPTOR
10	2	ORIFICE PLUG

Figure13-Redesigned brake oil controller schematic

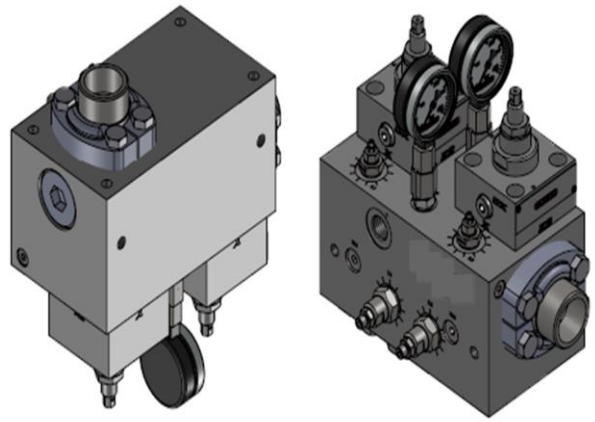

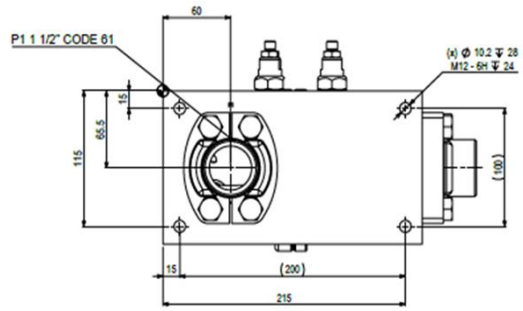

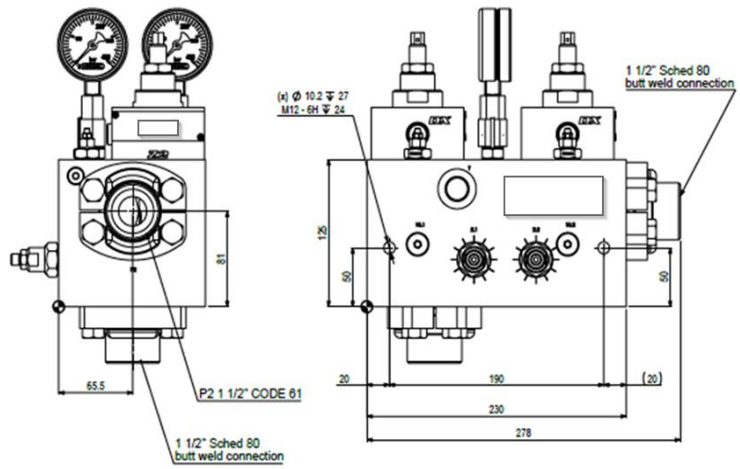

Figure14 –Redesigned Brake oil controller assembly

Copyright© 2018 by Turbomachinery Laboratory, Texas A&M Engineering Experiment Station

Figure15 - Dyno Brake impeller

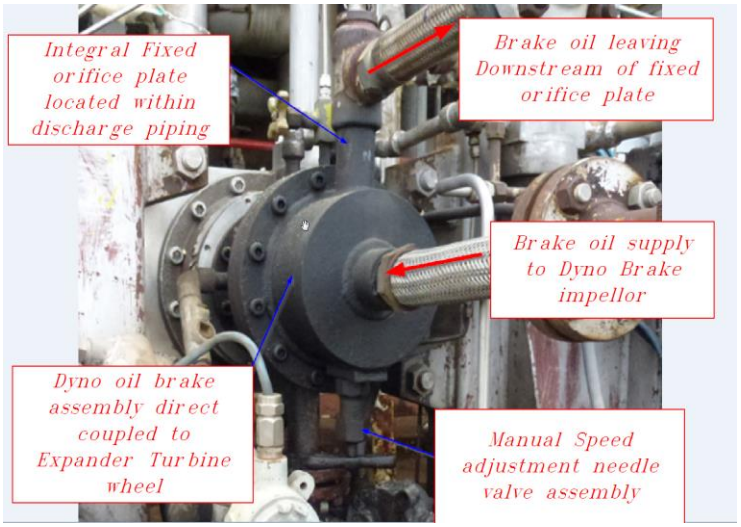

Figure17 - Dyno Brake "Original Fixed orifice design"

Figure16 - Dyno Brake integral fixed orifice plate

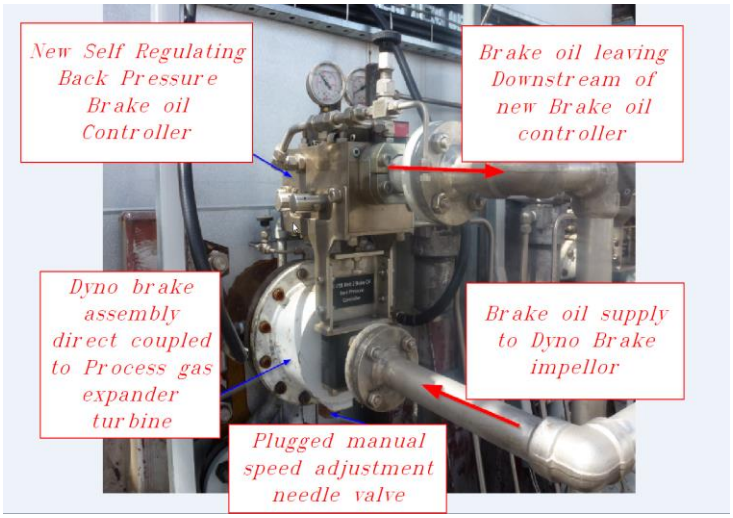

Figure 18 - Dyno Brake with new self-regulating controller

Copyright© 2018 by Turbomachinery Laboratory, Texas A&M Engineering Experiment Station

FACTORY ACCEPTANCE TESTING AND DATA

Due to the imprecision of the available performance data for the brake oil pumps, one of the important design features was to have the capability to adjust the control block operation with the expander operating. With the very small flows and high pressures in the brake oil circuits, we assessed that the sensitivity of expander operation to brake adjustment would be very high. In discussions with the hydraulics vendor, we decided we required confirmation and accurate characterization data for the various elements in the redesigned brake oil controller.

To replicate the oil brake service conditions that the redesign Brake oil controller would need to satisfy function, stability and endurance. The local hydraulics vendor had available a highly automated test rig consisting of a PLC controlled variable speed drive hydraulic oil pump capable of delivering the range of flow, pressures and temperature that the expander oil brake pump was estimated to deliver. Oil flow, temperature and pressure were all measured both at the inlet and outlet to the new controller. The test rig configuration also provided a means by which the oil temperature supply to the new controller could be varied. The new redesign hydraulic controller was then connected in the identical manner as it would be in the expander configuration and a series of factory acceptance tests were developed and completed.

The factory testing covered individual element testing in isolation to characterize their exact performance under the same operating oil fluid conditions and then followed by a reconfiguration of the combination of the manually adjustable fixed orifices and the pilot operated self-adjusting dynamic back pressure regulators. Following these tests an endurance test of operation was completed and a sensitivity to oil viscosity for oil temperature variations was completed.
The data collection was completed with a high resolution multi-channel data collector so that characterization and overall performance could be confidently established prior to field installation and commissioning. A series of 550 tests were carried out over a five day period.

Figure 19 – FAT variable speed oil supply pump

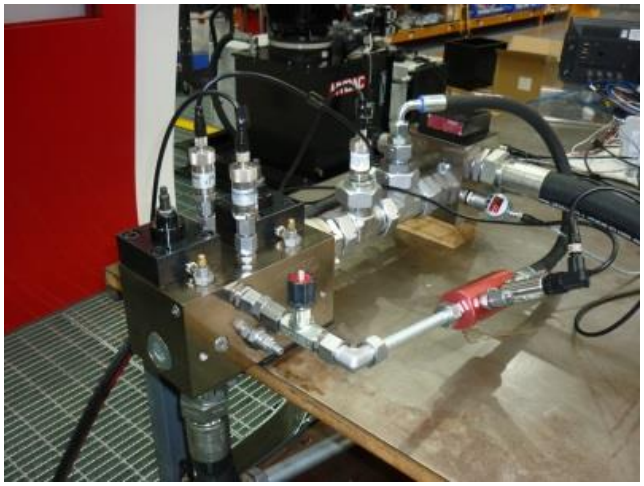

Figure 20 – New redesigned brake oil controller under test.

Copyright© 2018 by Turbomachinery Laboratory, Texas A&M Engineering Experiment Station

ANALYSIS OF DATA TO GENERATE PERFORMANCE CURVES

The performance test rig generated an enormous amount of data, as it was able to store data at 20mS intervals.

Analysis of the data was performed using PYTHON, due to its capability to process and filter all the data directly from the CSV files.

The typical output from PYTHON is illustrated in Figure 21, which shows the characterization of one of the 4 pilot valves, with the Y axis being back pressure and the X axis being number of turns open. The first chart shows time-averaged results, while the second illustrates the noise in the 20mS data by means of error bars. The noise was an unavoidable consequence of the test rig, which was adapted from its prime purpose of flow testing hydraulic pumps.

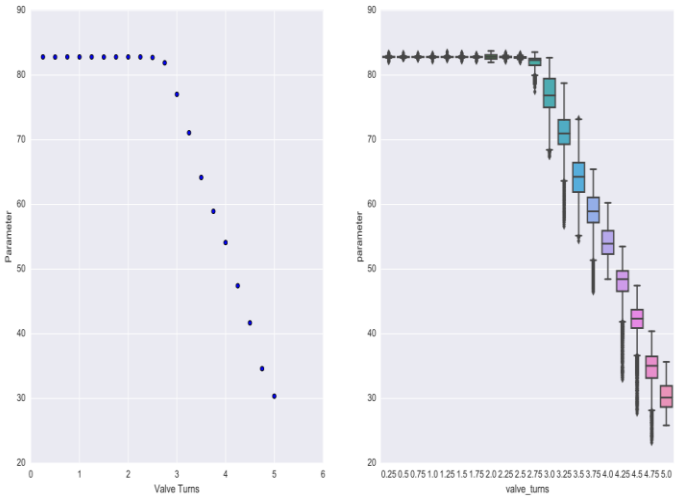

Figure 21 – Typical PYTHON generated plots

These two charts represent the processing of 20 CSV data files, each containing up to 15000 rows of data. The power of PYTHON is illustrated by the generation of these charts in less than 20seconds.

INSTALLATION, COMMISSIONING AND RELIABILITY

The installation of the new brake oil controller was scheduled to occur with a planned ethane cracker outage. The outage allowed for the existing expander units stage 1 and 2 modules to be completely removed from positon and transported to a local workshop for the rework to be performed. Special care was taken to ensure the fit up of the new controller and the removal of the original fixed orifices did not leave any contamination that would adversely affect the new controller's subcomponents. Extensive oil flushing of the brake oil circuits was also performed prior to reconnecting the new controllers into their final line up. The ability to work on the total brake oil circuit also allowed the inclusion of local measuring points for flow, pressure and temperature that were used in the FAT to be duplicated into the final installation. This was seen as a valuable means of commissioning and also post start up performance monitoring.

The design of the control blocks allowed for initial startup of the re-designed expander to mimic the previous design of a fixed orifice in the pump discharge. We judged this to be the lowest risk way to test the new equipment.

The test rig data and analysis allowed the control blocks to be accurately bench set by the position of each needle valve and pilot valve (turns open from the closed position). The needle valves in each block were set to match the flow capacity of the removed orifices. The primary pilot valves were each set to a conservative position, to control backpressure approximately 5 bar below the anticipated final condition. The secondary pilot valves were set to control backpressure approximately 5 bar above the primary.

The rationale for this setup was that, if our calculations of performance of the original orifices were correct, the plant operators would see a "normal" startup of the expander. However, if we had got it wrong, the new regulators would act to prevent over speed.

The startup proved successful and the unit was allowed to operate in "fixed orifice" mode for several days while other aspects of the rebuild were assessed.

Bringing the new backpressure regulators into service was accomplished by slowly closing in on the needle valves. Expander speed was observed to rise as expected, then stabilize as the back pressure regulator same into operation.

After the needle valves were set in their pre-selected position, the secondary back pressure regulator was brought into service by locking down the logic block cover on the primary regulator. Again expander speed was observed to rise as expected.

The secondary regulator was trimmed to the pre-selected speed (above design, but below trip) using the developed characteristic curve to estimate the change in turns open required on the pilot valve. Then the primary regulator was brought back into service and trimmed to design speed.

Copyright© 2018 by Turbomachinery Laboratory, Texas A&M Engineering Experiment Station

ANALYSIS OF PERFORMANCE

The perfomance of the re-designed expander has been assessed through the following figures. Figure 22 has the data since commissioning added to Figure 5 from earlier, illustrating that the delT has increased across the range of gas mass flow and has particularly increased at low flows

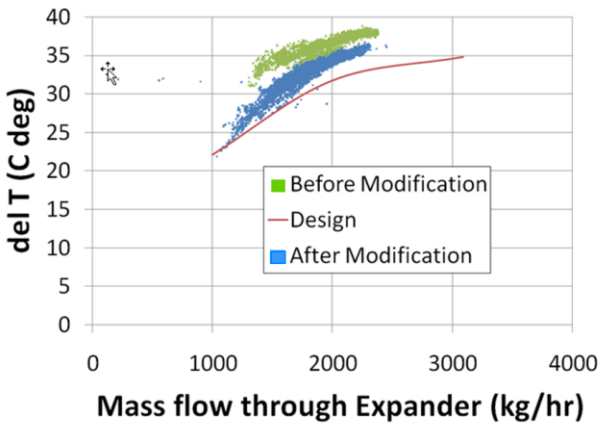

Figure 22 – Comparison of Re-design with Original

Figure 23 has the data since commissioning added to Figure 4 from earlier, illustrating that the increased delT has translated into uniformly lower temperatures at D735, substantially reducing the ethylene losses to fuel gas from this source. What is also notable is the absence of any "warm" temperatures above -130 deg C.

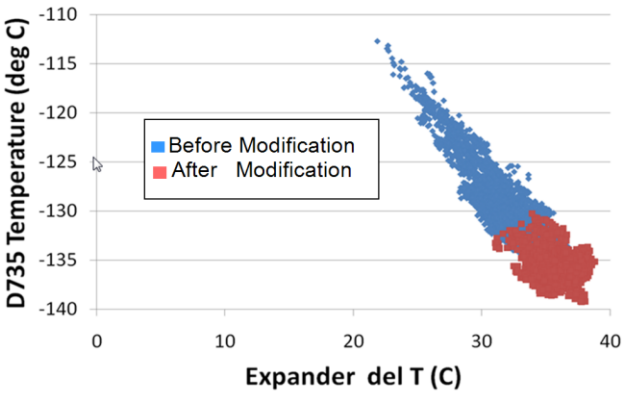

Figure 23 – Comparison of Re-design with Original

The post start up tuning of the new controller has been successfully completed with the expander in-service at all times and has shown excellent characterization with factory testing observations. The ability to drive the expander turbine wheel speeds closer to the original design points has pushed the operation limits for the related cryogenic service separation drums up to their critical cold temperature exposure limits that had never previously been achievable. The reliability to date has been excellent and expected to match or exceed the more simplistic fixed orifice design. With the additional monitoring instrumentation in the brake oil system no cavitation issues associated with the brake oil pumps running at higher speeds have been observed or are expected.

BUSINESS OUTCOME

The outcome for the business has been a direct ethylene yield increase. The financial impact has been valued at an annual profit increase of A$400,000 -500,000 for an outlay of A$125, 000.

CONCLUSIONS

The work done to improve the overall performance of a very reliable existing design showed that application of sound engineering principles, the use of proven subcomponent hardware and the flexibility in design for tuning and upfront factory testing can:

- Increase the refrigeration duty and widen the operating range of an existing expander /oil brake unit.
- Provide a basis for an automatic self-regulating design for new expander/oil brake units such that they are more tolerant to changes in duty or incorrect duty matching from the initial commissioning and throughout the life of their operation.

Copyright© 2018 by Turbomachinery Laboratory, Texas A&M Engineering Experiment Station