CONTAINMENT SEALS FOR API 682 SECOND EDITION

by
Peter E. Bowden
Technical Services Manager
John Crane EAA
Manchester, England
and
Chris J. Fone
Director of Technical Services
John Crane EAA
Slough, England

Peter E. Bowden is the Technical Services Manager of John Crane EAA (Europe, Africa, and Asia). He is based in Manchester, England, and is responsible for control of technical data across John Crane EAA. Mr. Bowden joined Flexibox International in 1989 working in design, development, projects, and market development including two periods working in Houston. He was Project Manager for the ZEST emission control sealing program before taking up his current position in 2000. He has written and presented a number of papers for technical conferences and journals around the world relating to seal design, emissions, and reliability.

Mr. Bowden earned a B.Sc. degree (Mechanical Engineering, 1979) from Stockport College of Technology. He is a member of the Institution of Mechanical Engineers and a registered Chartered Engineer.

Chris J. Fone is the Director of Technical Services for John Crane EAA, based in Slough, United Kingdom. He joined John Crane in 1971 and has worked in various technical roles including a period based in Iran. He chairs the British Standards Institute committee for seals, the joint European Sealing Association/Fluid Sealing Association Standards Task Force, and is a member of the task force creating the Second Edition of API 682. He has written and presented a number of technical papers on mechanical sealing to conferences around the world.

Mr. Fone earned a B.Sc. Honors degree (Mechanical Engineering, 1969) from Nottingham University. He is a member of the Institution of Mechanical Engineers and a registered Chartered Engineer.

ABSTRACT

The impending revision of API 682/ISO 21049 will include dry containment seals for the first time. These seals have been commercially available for over 15 years. This paper reviews the performance of these seals both in test and service in process plants to assess their capabilities of meeting API 682 target objectives of high reliability and emission control.

Options for secondary containment are reviewed though the paper focuses on two principal types, dry contacting and noncontacting containment seals. Data from the test laboratory are related to field experience and recommendations made for when the two types of design are best applied. Both emission performance and seal reliability experience are drawn from refineries in the United States, Europe, and the Asia Pacific regions to validate operational expectations. Seal support systems for the two types of containment seals are described and reviewed.

INTRODUCTION

Application of dry (or gas lubricated) containment seals has been increasing steadily for many years as process plant operators have sought better leakage control from their pump seals without the cost of liquid barrier and buffer dual seals and systems. Application of mechanical containment seals has particularly increased on light hydrocarbon duties where single seals would find it difficult to maintain compliance with local and national emission regulations. The forthcoming issue of API 682 Second Edition/ISO 21049 (2001) formally recognizes this seal arrangement and will include it within the standard along with qualification test programs and recommendations for support systems.

This paper looks at the options available for containment sealing and reviews historical testing of mechanical containment seals (both contacting and noncontacting). Seal support systems to be included in API 682 Second Edition/ISO 21049 are described and guidelines given for their application. The paper also looks at performance of these seals in process plants across the United States, Europe, and Asia, and compares this real life performance with the targets set within the standard.

SECONDARY CONTAINMENT—GENERAL OBJECTIVES

The containment of primary seal leakage is a feature commonly applied to pump and compressor seal assemblies. The requirement for leakage containment has various needs that influence the choice of arrangement.

- Minimizing the fluid loss to the atmosphere upon failure of the primary seal and reducing the resulting hazard potential
- Assist channeling primary seal leakage to a suitable collection point to maintain cleanliness and permit monitoring of primary seal operation
- Reducing the hazard potential caused by primary seal leakage
- Reducing or eliminating the atmospheric pollution potential arising from primary seal leakage

- Sealing quench fluids

Typical containment techniques that are applicable to combinations of the above features are described below under section "SECONDARY CONTAINMENT—TECHNIQUES AND DESIGNS," together with a discussion of the strengths and weaknesses of the options.

This document however primarily addresses the hazard and pollution issues of secondary containment and not the containment of quench fluids for other reliability benefits. It is in this containment role that seal suppliers have developed products that are intended to provide the following functions.

- A period of operation equivalent to the design life expected of the primary seal and during which the primary seal leakage to atmosphere will be contained within acceptable levels

- A capability of alarming the operator when the primary seal leakage has exceeded normal levels and a capability of providing effective containment for a short period of time thereafter. This delay period is to enable the equipment to be shutdown without affecting the normal running of the plant process and maintenance functions.

This latter design specification is sometimes misunderstood by some individuals. In some quarters there is a presumption that the secondary containment system can be arranged to provide an equivalent environment to that enjoyed by the primary seal for an indefinite period. This is not normally practical and ignores the main function of secondary containment: to provide a second line of defense in minimizing hazard and atmospheric pollution.

This was appreciated by the task force developing the draft of API 682 Second Edition/ISO 21049 and resulted in the following objective stated by the standard.

> Containment seals should run for at least 25000 h (wet or dry seals) at any containment seal chamber equal to or less than the seal leakage pressure switch (not to exceed a gauge pressure of 0.7 bar (10 psi)) and for at least 8 h at the full seal chamber conditions (API 682 Second Edition/ISO 21049, 2001).

SECONDARY CONTAINMENT—TECHNIQUES AND DESIGNS

Fixed Bushings

This is a ring of nonsparking material (generally bronze or carbon graphite) inserted into the atmospheric side of the gland plate (Figure 1). The bore of the bushing is minimized to provide a restriction between itself and the sleeve to minimize major seal leakage. The need to prevent dynamic contact and accommodate pump dimensional constraints puts practical limits on the dimensions of this radial restriction. These limits are recognized in API 682 Second Edition/ISO 21049, which recommends:

> The diametrical clearance at a fixed throttle bushing bore shall not be more than 0.635 mm (0.025 in) for sleeve diameters up to 50 mm (2 in). For larger diameters, the maximum diametrical clearance shall be 0.635 mm (0.025 in) plus 0.127 mm (0.005 in) for each additional 25 mm (1 in) of diameter or fraction thereof (API 682 Second Edition/ISO 21049, 2001, paragraph 6.1.2.22, 2001).

The standard recommends fixed bushings as the default standard for Arrangement 1, Category 1, and 2 seals. For Category 1, which is assumed to apply primarily to chemical and petrochemical services, the required material is carbon graphite while a nonsparking metal, such as bronze, is specified for Category 2.

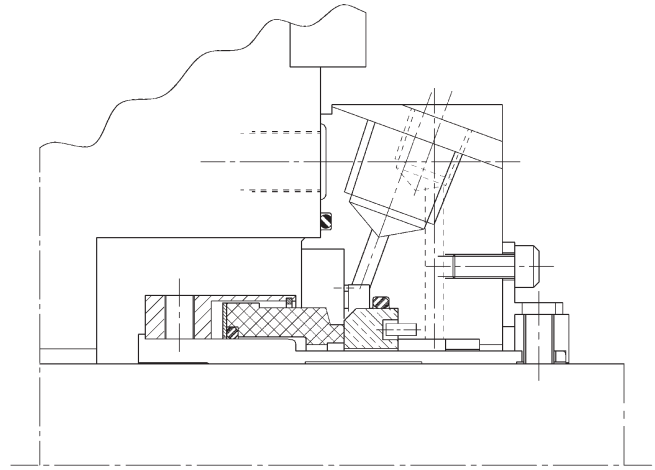

Figure 1. Single Seal with a Fixed Bushing.

Floating Bushings

Designing the bushing to float radially enables shaft movement and its eccentricity with the gland plate to be better managed, and permits a reduced clearance with the shaft sleeve. Two forms of floating bushing are commonly available, a solid ring bushing and a segmented design. These bushing designs are required for Arrangement 1, Category 3, seals in the draft API 682 Second Edition/ISO 21049 and are an optional choice in both other categories. They are currently a default option with all cartridges in the API 682, First Edition (1992).

Solid Floating Bushing

This is a ring of carbon graphite, located in the atmospheric side of the gland plate but free to move radially to center on the sleeve (Figure 2). The bushing is axially located by inboard springs. Smaller diametrical clearances can be tolerated than those of a fixed bush. Table 1 lists those recommended from the first edition of API 682 and reproduced in the draft API 682 Second Edition/ISO 21049.

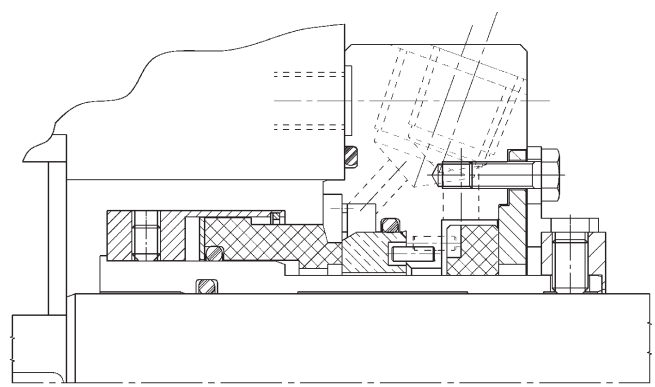

Figure 2. Single Seal with a Solid Floating Bushing.

Table 1. Floating Carbon Throttle Bushing—Diametrical Clearances.

Sleeve diameter		Maximum diametrical clearance at pumping temperature	
mm	(in)	mm	(in)
0 to 50	(0 to 2.00)	0.18	(0.007)
51 to 80	(2.01 to 3.00)	0.225	(0.009)
81 to 120	(3.01 to 4.75)	0.28	(0.011)

The relationship to the process temperature required by the standard, and the differential expansion between the 316 sleeve and the carbon graphite ring, constrain the applicable temperature range in which a single design can be used.

Segmented Floating Bushing

Segmenting the ring and utilizing a garter spring for retention can further reduce radial clearance between the shaft sleeve and the floating bushing (Figure 3). Axial springs again act to position the bushing. The circumferential flexibility can be used to accommodate dimensional tolerances and differential expansion. This technology, developed originally for steam turbine seals, has a designed contact between sleeve and bushing, but after a period of wear typically operates with a diametrical gap of approximately 0.04 mm (0.0015 in). This gap reduces significantly with the application of a pressure differential, thus further reducing the leakage through the bore.

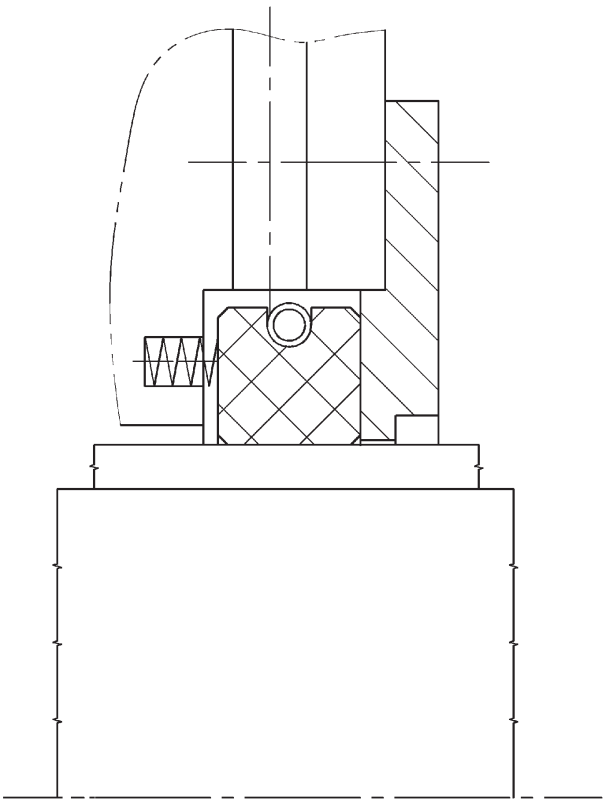

Figure 3. Segmented Floating Bushing.

Lip Seals

This technology is available in elastomeric and polymer designs but is rarely used for secondary containment. The low cost and short axial length make it an attractive solution, but the technology is currently unable to provide the effective containment and mean time between repair (MTBR) expectations of plant operators with the low viscosity fluids and wide temperature ranges applied in the field. For these reasons this technology has not yet been included in the choices available in the draft API 682 Second Edition/ISO 21049 and will not be covered in this document.

Lip seals are used in specialist secondary containment arrangements, primarily to retain quench fluids, particularly those that have sufficient lubricating properties or where there is some tolerance to slight leakage.

Abeyant Seals

This terminology describes a principle of operation requiring the containment seal to be effective in the event of an excessive leakage from the primary seal, but only offering limited sealing function in normal operation. Most of the designs available rely on the primary seal leakage flow generating a pressure differential in the arrangement that moves or activates a normally dormant secondary containment seal.

There are still many abeyant secondary seals operating in the field, and there are frequent examples where the technology has prevented a major hazard occurring. The principle however now has limited application because other available technologies can offer improved and reliable containment at all the primary seal leakage rates. For this reason the draft API 682 Second Edition/ISO 21049, and its current predecessor, does not include the option for this principle and it will not be included in further parts of this document.

Dry (Gas Lubricated) Mechanical Seals

Technologies have been developed to enable the faces of mechanical seals to operate reliably in a gaseous environment without needing liquid lubrication. This opens the opportunity for simplified but reliable secondary containment with radial faced mechanical seals. Although they are ordinarily lubricated by the process leakage entering the containment chamber, they can also be used with an injected buffer gas where this is desired.

This technology and its application to secondary containment have been widely used for more than a decade and are referenced in API 610, Eighth Edition (1995). Although not included in the first edition of API 682 it is now a formal part of the draft API 682 Second Edition/ISO 21049 as a selection option in the Arrangement 2 configuration and in all three categories. In conformance with other alternative configurations recommended by the standard, the design and applicability of this technology are addressed. A series of qualification tests that imitate its use in the field is part of the specification (refer to section *"API 682, Second Edition, Qualification Tests"*). The standard also requires a fixed nonsparking bushing to be installed inboard of the containment seal faces and downstream of the containment chamber vent connection to help isolate the faces from the process leakage (Figure 4).

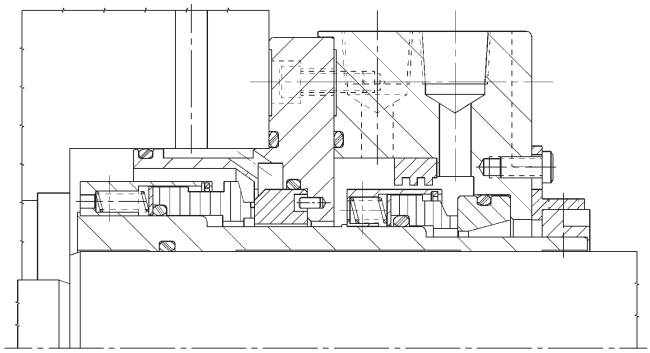

Figure 4. Dual Seal with External Dry Contact Containment Seal.

Two alternative gas lubricated technologies are described below.

Dry Contacting Seals

The design and materials technology now available enables the use of radial faced mechanical seals to operate in a gas with an acceptable MTBR capability at pump 2 pole speeds (Figure 4). The dry rubbing contact restricts the technology to a low pressure range, but the material properties also enable much higher liquid lubricated performance with the same seal face pairing. The capability thus exists for effective containment of normal primary seal leakage in whatever physical state it is at ambient conditions, plus containment in the event of a major failure of the primary seal without the need for a separate lubricating buffer fluid (refer to section *"Dry (Gas Lubricated) Mechanical Seals"* below).

Dry Noncontacting Seals

Noncontacting gas seal technology can also be applied to the mechanical seal using macro adjustment of the rubbing face profile

and surface (Fone, 1995). When in dynamic operation the seal face operates with a full separation of the running parts but, in all other respects, functions in the same way as the dry contacting seal (Figure 5). Statically the faces physically contact and, having a full circumferential region where this occurs, minimizes leakage.

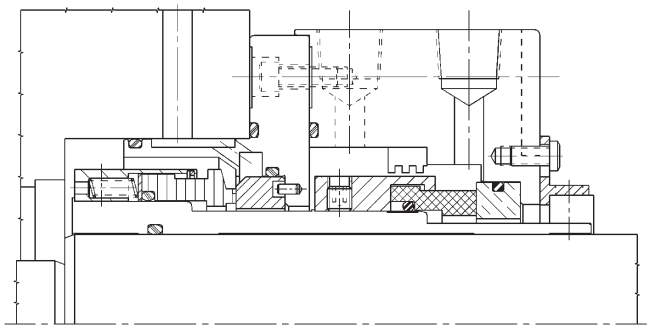

Figure 5. Dual Seal with External Dry Noncontact Containment Seal.

The draft API 682 Second Edition/ISO 21049 considers the acceptability of both technologies but recommends a default to the noncontacting design, arguing the technology is more tolerant of pressure excursions in the normal arrangement when the containment chamber is connected to the plant flare system. These issues are discussed below in section *"Dry (Gas Lubricated) Mechanical Seals."*

Dual Contacting Wet Seals with an Unpressurized Buffer

This configuration uses a mechanical seal between the primary seal and atmosphere for secondary containment, but lubricates its faces with a liquid buffer fluid (Figure 6). This fills the containment chamber and is supplied by an externally connected reservoir. Primary seal leakage, normally in gaseous form, enters the buffer liquid system and is removed through the reservoir connection to the flare.

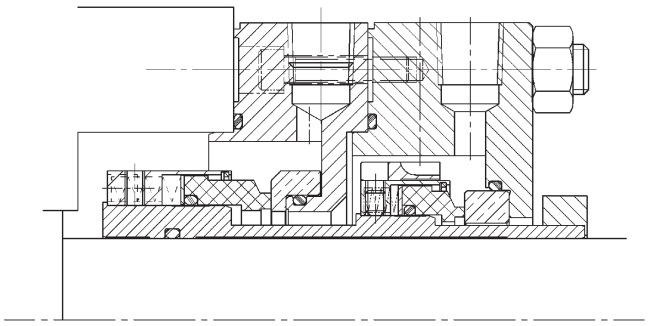

Figure 6. Dual Contacting Wet Seal with an Unpressurized Buffer.

This robust arrangement has been used for secondary containment for decades and the seal arrangement has been part of API 610 over this period. It is classed as Arrangement 2 in the current API 682, First Edition, and is reproduced as one of the Arrangement 2 options in all three categories of the draft API 682 Second Edition/ISO 21049. The Standard requires a circuit loop with a positively circulated buffer liquid and a heat exchanger to remove heat to ensure reliability in the outer seal.

SECONDARY CONTAINMENT—SELECTION

The selection criteria for secondary containment seals must be a judgement on the potential hazard or atmospheric pollution capability arising from normal primary seal leakage and that arising from a failure (refer to discussion in section "SECONDARY CONTAINMENT—GENERAL OBJECTIVES" above). Corporate and plant standards as well as local government, national, and transnational regulations however also influence these judgements. Definitive rules are thus impractical, but design function can offer guidance in selection. These issues are discussed below.

Bushings

The diametrical clearances practical with fixed bushings limit their applicability for secondary containment. At normal leakage levels their shape at the containment chamber exit does encourage the channeling of liquid leakage through the gland plate drain connection. They however offer negligible containment or flow channeling in the event of the primary seal leakage being gaseous, but do assist with the throttling of flow to the atmosphere at excessive liquid leakage levels. The main contribution of fixed bushings in hazard reduction primarily occurs in the event of a shaft bearing failure; being the closest radial contact point, they provide a frontline nonsparking contact region for the shaft sleeve and radial protection for vulnerable seal components.

The simplicity and small dimensional boundaries still make these limited benefits attractive where the need for hazard management is not a major factor in secondary containment, and is why they are a common feature on single seal cartridges.

With a cube power relationship between flow and bushing clearance, there is significantly improved containment capability with the floating bushing. This is the source of the preference in API 682, First Edition, and why the draft API 682 Second Edition/ISO 21049 defaults to this design on Category 3 seals. Other benefits feature with the floating bushing such as easier assembly on between-bearing pump designs. Radial movement must be generous to minimize the potential of clogging and permit effective draining, whereas this may compromise the protective features of the bushing. One solution is the construction of the retaining plate in bronze with a fixed bushing clearance on the sleeve (Figure 3). The plate section and clamping of the retaining plate must be designed for the maximum potential chamber pressure.

In API 682, First Edition, while not normally recommended on dual seal arrangements, the floating bushing was left as an option for those process temperature extremes when the barrier or buffer fluid may itself be a hazard or there is a potential that icing may impede seal flexibility. The effectiveness of their function is not universally accepted, and this option has been removed from the second edition unless a separate agreement with the vendor is arranged. Practical axial length constraints, required by the pump industry to improve reliability, compromise the primary function of dual seals if a bushing is specified.

A result of designing for a maximum range of temperature for the solid ring floating bushing is that maximum clearance will occur at the lower temperatures that are more typical in services where the process leakage is gaseous at ambient conditions. Its containment role is thus still limited for these high vapor pressure processes, and a segmented ring design offers far superior capability in these circumstances (Figures 7 and 8).

In conclusion bushings provide various levels of containment, primarily minimizing the fluid loss to the atmosphere upon failure of the primary seal and reducing the resulting hazard potential. They assist in channeling primary seal liquid leakage to a suitable collection point to maintain cleanliness, and enable monitoring of primary seal operation.

Dry (Gas Lubricated) Mechanical Seals

The development of gas lubrication on radial faced mechanical seals has filled a gap in the secondary containment capability of bushings. The smaller leakage levels that can be achieved offer the plant operator a far improved containment of gaseous

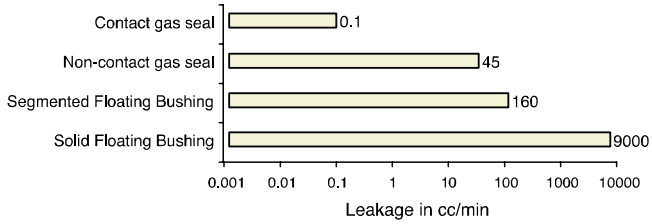

Figure 7. Generalized Comparison of Leakage Rates. (50 mm (2 inch) size, 3000 rpm, with propane at 0.7 barg (10 psig).)

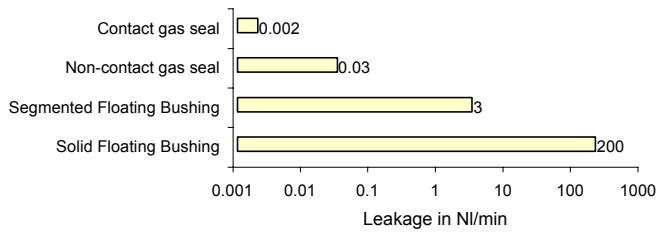

Figure 8. Generalized Comparison of Leakage Rates. (50 mm (2 inch) size, 3000 rpm, with water at 2.75 barg (40 psig).)

leakage during periods of primary seal disturbance or during its failure cycle. It also allows effective connection of leakage to a vapor recovery or flare system and monitoring and warning of the primary seal leakage condition (refer to section "SECONDARY CONTAINMENT—SYSTEMS AND OPERATION" below) without the additional complication of connecting reservoirs.

The choice of whether to incorporate dry contacting technology or noncontacting technology is a tradeoff in features and benefits. These are summarized below:

- *Dry Contacting Seals*

• Faces will wear and eventually lose their containment capability; this will be beyond a 25,000 hour operating period, but dry contacting wear rates are sensitive to pressure differentials (Figure 9). The only monitor on their condition however is periodic pressure test of the containment chamber (refer to section *"Dry (Gas Lubricated) Mechanical Seals"* above).

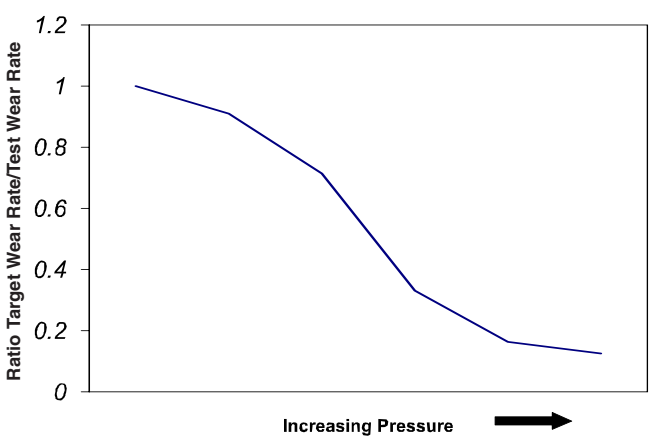

Figure 9. Typical Wear of Dry Contact Seals as a Function of Pressure Differential.

• The sealing gap is very small with contacting seals, and leakage to atmosphere is comparatively low (Figures 7 and 8). This is seen by some operators as being important when directly connected to vapor recovery or flare systems; in this scenario there might be a risk of leakage back-flow from the system itself, exaggerating the potential for atmospheric pollution and favoring a lower leakage technology. The same benefit applies when sealing a steam quenched containment arrangement in order to reduce the level of water vapor reaching the adjacent shaft bearing lubrication system.

- *Dry Noncontacting Seals*

• The face technology applied with these designs should operate without contact, and hence wear should be negligible. While monitoring of the seal's condition can be done in the same way as contacting seals, the need is less critical.

• The normal consequence of a thicker face film is higher leakage levels than the alternative contacting technology (Figures 7 and 8). The comparative leakage however is still very low and should not exceed the EPA Method 21 (1990) level of 1000 ppm in all planned circumstances including failure of the primary seal, depending on the design of the monitoring and recovery system (refer to section "SECONDARY CONTAINMENT—SYSTEM SETTINGS AND ISSUES" below). During normal operation the seal would not emit to the atmosphere any more leakage volume than that originating from the primary seal; for the majority of services this should not exceed an EPA Method 21 value of 500 ppm.

• The face technology is applicable to high gas pressures and, when incorporated into a containment seal, it is far more tolerant to pressure fluctuations in the recovery or flare system than the dry contacting equivalent.

• Although dry contacting seals operate with low face temperatures (Bowden, 1995), this may not be the case if it were subject to abuse, such as the containment chamber being blocked-in. This would require the operator to have more rigorous alarm and shutdown procedures. A noncontacting seal should not be vulnerable to this scenario, and thus offers less risk of being an ignition source.

• Dry noncontacting technology requires a macro adjustment to the face surface, which is vulnerable to clogging in some environments. Primary seal leakage that is abrasive, or is liquid at ambient conditions and may harden, can compromise the design. The draft API 682 Second Edition/ISO 21049 requires a nonsparking bushing to separate the containment seal rubbing faces from the containment chamber vent or drain (Figure 4) connection. This will reduce the effect of the primary seal leakage on the containment seal faces and improve the effectiveness of any buffer gas injection applied.

• Buffer gas injection (refer to section *"Plan 72 (New Plan)"* below) is often sourced from a plant nitrogen system. If the gas supply is cryogenically generated or lacks humidity, it can detrimentally affect the life potential of some of the carbon graphite materials used in the dry contacting seals. Special materials or a humidifier may be necessary for reliable operation in these circumstances with this technology. Dry, noncontacting seals use a different lubrication technology and are not vulnerable to this situation.

Dual Contacting Wet Seals with an Unpressurized Buffer

The choice between dry secondary containment and dual contacting wet seals with an unpressurized buffer is also a judgement. The major benefit of the more traditional dual contacting wet (tandem) seals is the additional containment role of the buffer liquid in reducing operating and failure levels of primary seal leakage reaching the atmosphere. This is only achieved however with a more complicated and higher capital and operating cost support system (refer to section *"Plan 52, 61, and 62"* below), together with the added dependency of the containment seal on the availability of the buffer liquid.

This seal arrangement, together with dry containment seals, is intended to manage primary seal leakage that is gaseous at ambient

conditions. If there is a high proportion of liquid primary seal leakage, this will have the effect of contaminating the buffer liquid and increasing the hazard and seal system reliability. This problem can be overcome by the application of increased reservoir monitoring and the use of a high-level alarm switch; regular replacement of the buffer fluid is also required (refer to section *"Plan 52, 61, and 62"* below). The containment benefits however sometimes outweigh the added operating cost. As the alternative is a more complicated pressurized dual seal, the dual unpressurized contacting wet seals are still sometimes used in these services. Processes with higher specific gravity (sg) than the buffer liquid or water contaminated services aggravate the problem; they have a tendency to displace the buffer and compromise the wet containment seal. This arrangement is not recommended in these circumstances.

The presumption by some engineers that the buffer liquid enhances cooling of the primary seal is an inaccurate assumption when the process leakage is gaseous; the gas typically centrifuges into the region where heat transfer may otherwise have been achieved. In addition, on services where the buffer balance temperature is higher than the process flush, consideration needs to be made for an additional heat flux into the primary seal fluid film where it may affect the film's stability and potential vapor pressure margin.

SECONDARY CONTAINMENT—SYSTEMS AND OPERATION

The containment seal and its associated chamber need the addition of a support system to enable the primary seal leakage level to be monitored and alarm systems to be activated at a predetermined level. Leakage levels from the containment seal to atmosphere normally have an association with the condition in the containment chamber. The majority of support systems measure the condition in the containment chamber and at predetermined levels have operational strategies applicable to the equipment. The sections below (*"System Piping Diagrams"*) describe the function of commonly used support systems, their relevance to the draft API 682 Second Edition/ISO 21049, and the factors influencing the choice. The subsequent section ("SECONDARY CONTAINMENT—SYSTEM SETTINGS AND ISSUES") discusses the design and inclusion of some of the components within the systems themselves.

System Piping Diagrams

International pump standards, and more recently API 682, First Edition, have recommended system piping diagrams for secondary containment. The "plan" references in API 610 are the most consistently used descriptions, but in the draft of the ninth edition of this standard, now also being considered as a draft of ISO 13709, the plans are being excluded. In future they will only be available in the draft API 682 Second Edition/ISO 21049 and to accommodate additional secondary containment configurations. Four new plans have been added.

The key to piping connection descriptions in the plans shown in Figures 10 to 17 is:

Key:
CSD = Containment seal drain
CSV = Containment seal vent
D = Drain
GBI = Gas buffer inlet
LBI = Liquid buffer inlet
LBO = Liquid buffer outlet
Q = Quench

Plan 52, 61, and 62

Secondary containment is currently accommodated in API 610, Eighth Edition, and API 682, First Edition, by the designation Plan 52 (Figure 10), Plan 61 (Figure 11), and Plan 62 (Figure 12). While these cater for dual contacting wet seals with an unpressurized buffer liquid (Plan 52) and bushing solutions, they are not applicable to dry mechanical containment seals. These existing plans continue to be retained in the draft API 682 Second Edition/ISO 21049.

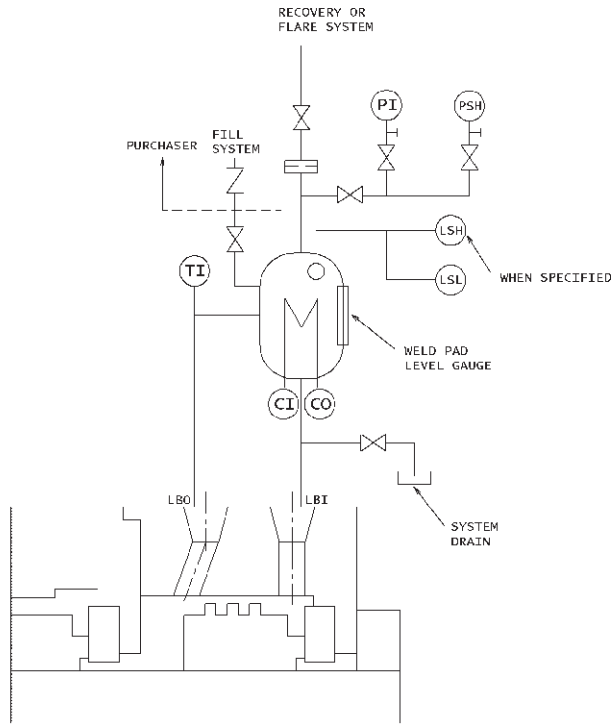

Figure 10. Plan 52 Support System.

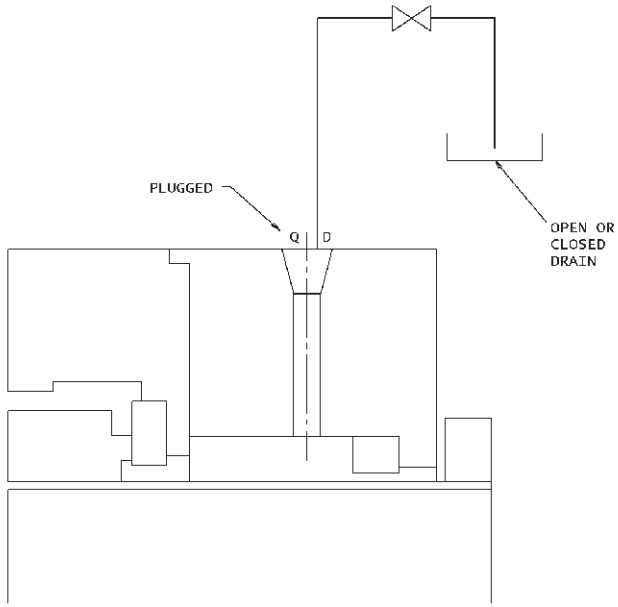

Figure 11. Plan 61 Support System.

Plan 71 (New Plan)

Plan 71 (Figure 13), while not including additional equipment, is the default piping connection arrangement for the containment chamber intended for dry mechanical containment seals. It is mainly intended to be used in conjunction with other plans (refer

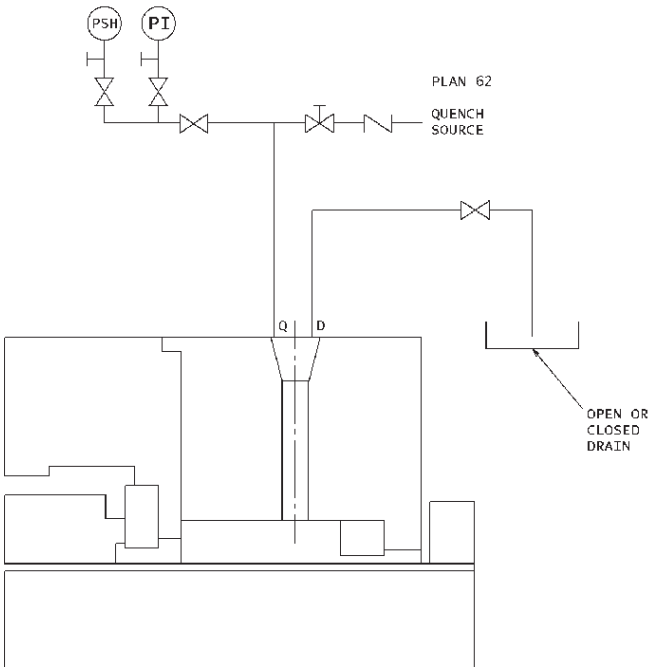

Figure 12. Alternative Plan 61 Support System Also Showing a Plan 62.

to sections *"Plan 75 (New Plan)"* and *"Plan 76 (New Plan)"* below) and, although it offers the operator the provision for a buffer gas connection if needed, this would not be part of the initial purchase specification.

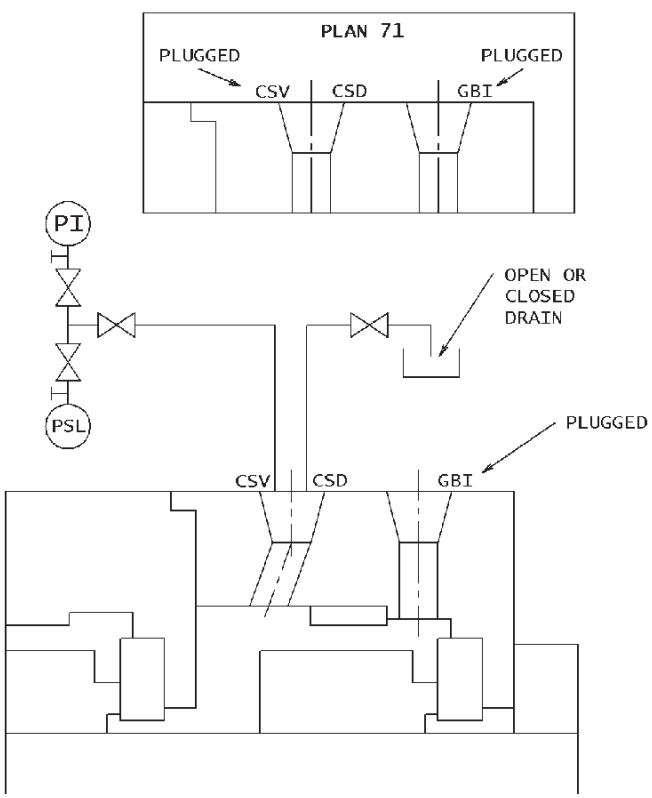

Figure 13. Formal Plan 71 with an Alternative Plan 71 Support System.

The operator can use his own preference for system piping as an alternative to the recommended plans. An example of this is shown in Figure 13. This example is only applicable where the primary seal leakage is only gaseous at ambient conditions and there is no suitable vapor recovery or flare system available. It is only suitable with dry noncontacting seals because the containment seal chamber can only be relieved of pressure through the containment seal; noncontacting gas seal technologies are the only seal concepts capable of operating at the gas pressures that will occur in this environment.

Plan 72 (New Plan)

Plan 72 (Figure 14) describes the system requirements for a buffer gas supply arrangement. It is only used in combination with Plans 75 and 76. Pressure in the chamber is controlled by a forward-pressure regulator and the gas flow maintained through the interaction of the regulator with an orifice (refer to section *"Orifice Size and Pressure Alarm Settings"* below). A flow indicator provides a check on the flow rate and monitors any adjustment. The upstream pressure of the orifice should be regulated at the high-pressure alarm level in the containment chamber outlet system (Plan 75 or 76). This will ensure a buffer flow is retained up to the seal failure alarm level and at which point the protective check valve is also initiated. This pressure regulation setting will also ensure there is minimal risk of the buffer system setting off the seal failure alarm and will simplify testing of the combined containment system. A low-level pressure switch will provide warning in the event of a loss of buffer supply pressure, and a high-level flow switch will signal a significant failure of the containment seal.

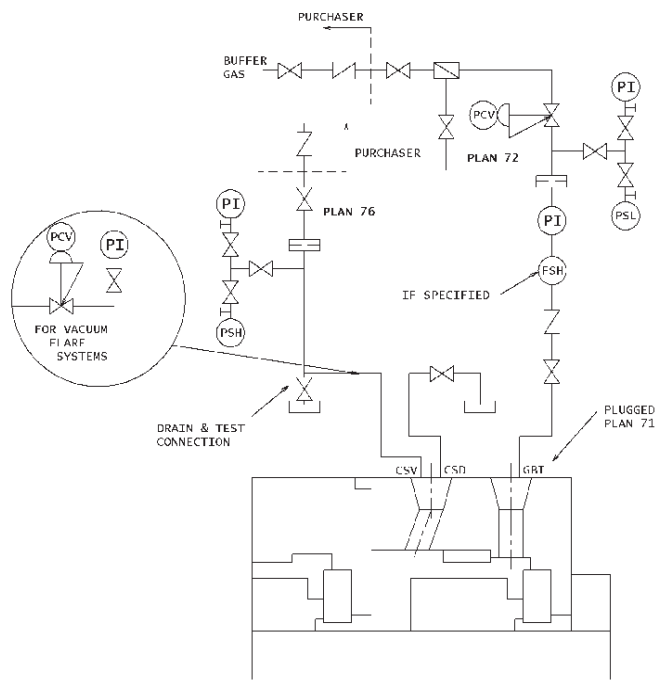

Figure 14. Combined Plan 72 and Plan 76 Support Systems.

The supply of buffer gas to the containment seal chamber is intended for use with dry mechanical containment seals and is ordinarily chosen when the emission of process gas to the atmosphere must be below their typical emissive levels; an example might be a process unacceptably contaminated with hydrogen sulfide (H_2S). It also can improve emission levels during the failure cycle of the primary seal where this additional level of containment is required. With the higher leakage levels of the dry noncontacting seals, it is more usually applied with this technology. Buffer gas systems however are also used where additional protection is required for the containment seal faces, for

example, waxing or heavy hydrogen chloride (HC) residue. Some operators even choose this plan as a means of keeping orifices clean (refer to section *"Orifice Size and Pressure Alarm Settings"* below).

In cryogenic services it can be used to prevent icing, but in these circumstances the system is better applied through the quench connection of a Plan 62 with a fixed bushing (Figure 12). In this situation, to avoid an error in the connection position, it cannot be referenced Plan 72 and would come under the umbrella description of a Plan 62. Specialized containment seals, not included in the draft API 682 Second Edition/ISO 21049, can be used with this Plan 62 quench gas system to provide a more secure containment in potentially toxic services. The quench gas is pumped into the containment chamber using inner diameter located spiral groove technology, and is then combined with a Plan 76 exit system (Figure 15).

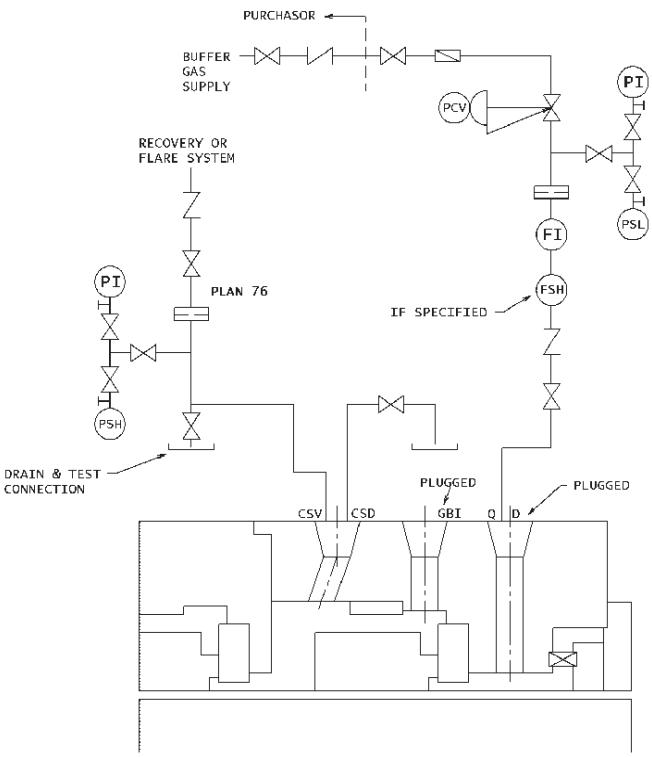

Figure 15. Combined Alternative Plan 62 and Plan 76 Support System.

Plan 75 (New Plan)

Plan 75 systems (Figure 16) are connected to the outlet of the containment chamber incorporating dry containment seals but in services where the primary seal leakage has a high proportion of process fluid that is liquid at ambient conditions. It consists of a reservoir that is intended to collect the liquid proportion of the contained primary seal leakage with a high-level switch to warn the operator that a fixed quantity of leakage has occurred and there is the risk of contaminating the vapor recovery or flare system. The draft API 682 Second Edition/ISO 21049 provides design recommendations for this reservoir. A drain connection in the reservoir allows the liquid to be safely removed. An upper tapping is connected to a vapor recovery or flare system through an orifice and an upstream high-level pressure switch (refer to Plan 52 in section *"Plan 52, 61, and 62"* above and section *"Plan 76 (New Plan)"* below). This is preset to alarm at an excessive flow condition related to a primary seal failure (refer to section *"Orifice Size and Pressure Alarm Settings"* below).

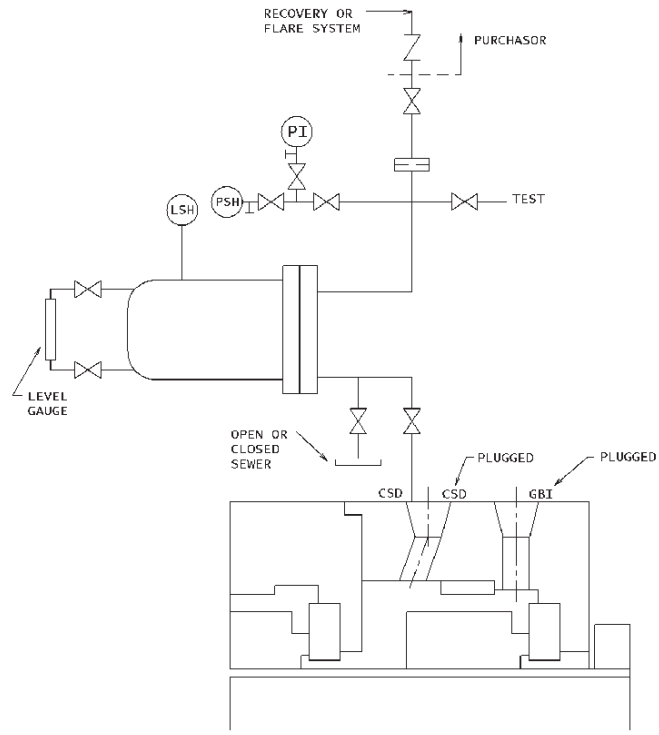

Figure 16. Plan 75 Support System.

A pressure indicator is recommended to permit monitoring of the primary seal leakage rate prior to the alarm condition, and a level gauge in the reservoir allows the operator to monitor the quantity of liquid collected prior to the alarmed condition. A block valve in the connection to the vapor recovery or flare system can be shut and used to monitor the system function and condition of the containment seal by measuring the pressure buildup rate. The draft API 682 Second Edition/ISO 21049 however recommends the inclusion of a test connection to allow the static checking of the system function and the condition of the containment seal itself using a separate gas source (refer to section *"Dry (Gas Lubricated) Mechanical Seals"* above).

The primary use of this plan has been described above but operators may choose its features, instead of Plan 76, even on process services that have a major proportion of vapor at ambient conditions, in order to protect their recovery systems from liquid contamination. Alternatively, where the process condition is nearly completely liquid at ambient and a closed drain is available, Plan 75 is considered overcomplicated and the system shown in Figure 17 is applied. The principle of operation is the same but sizing of the orifice has a different set of parameters (refer to section *"Orifice Size and Pressure Alarm Settings"* below).

Dry containment seals are available for hot hydrocarbon services where steam is used to prevent coking of the primary seal as well as functioning as a buffer gas to minimize the flammable risk. The monitor and containment system described in Figure 17 can also be used in these circumstances but with a steam supply connected to the containment chamber inlet connection.

Plan 76 (New Plan)

Plan 76 (Figure 14) is the alternative system to the Plan 75 for channeling and monitoring primary seal leakage from the containment chamber incorporating dry containment seals. The system is intended for process services that are primarily gaseous at ambient conditions. Its function is the same as the vapor tapping on the collection reservoir of the Plan 75; the containment chamber vent connection is connected to a vapor recovery or flare system through an orifice and an upstream high-level pressure switch

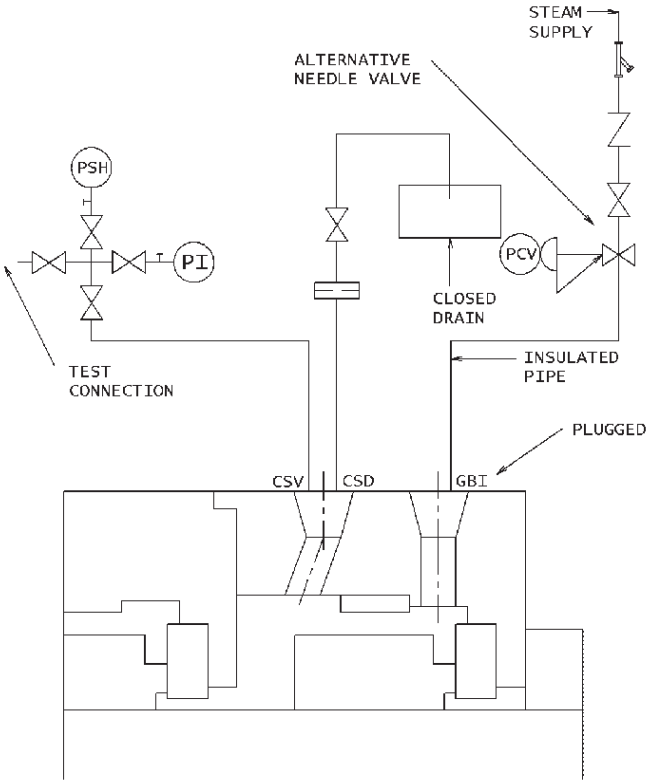

Figure 17. Alternative Liquid Process Containment System (Including a Steam Buffer).

(refer to section *"Orifice Size and Pressure Alarm Settings"* below). This is preset to alarm at an excessive flow condition related to a primary seal failure. The Plan 76 can be used with a Plan 71 or Plan 72, but would not normally be combined with a Plan 75.

A block valve in the Plan 76 system is intended to facilitate maintenance, but in the same manner as the Plan 75 it can be shut and used to monitor the system function and condition of the containment seal by measuring the pressure buildup rate. A drain valve is recommended in the circuit to remove any buildup of condensate in the vapor circuit, but it can also be used as part of an alternative testing method (refer to section "SECONDARY CONTAINMENT—DRY MECHANICAL SEAL INSTALLED TESTING" below). A separate gas source can be applied to the connection that, when combined with the block valve, can also be used to check the system function and the condition of the containment seal itself (refer to section "SECONDARY CONTAINMENT—DRY MECHANICAL SEAL INSTALLED TESTING" below).

There may be some unusual circumstances when the vapor recovery or flare system is ordinarily at a slight vacuum and there is the potential of air ingress through the containment system and seal. In these circumstances a back-pressure regulator can be inserted upstream of the orifice and alarm switch to maintain a slightly positive pressure in the seal containment chamber (Figure 14).

SECONDARY CONTAINMENT—SYSTEM SETTINGS AND ISSUES

Orifice Size and Pressure Alarm Settings

The orifice and pressure alarm are interconnected components providing the fundamental condition monitoring elements in Plans 52, 72, 75, and 76. The slightly different functions of these plans and extensive field operational experience have resulted in significant variability in the specification of these monitoring components. In the first edition of API 682, and repeated in the draft API 682 Second Edition/ISO 21049, is a specification for a minimum orifice diameter of 3 mm (1/8 in). There is also an intent throughout this latter draft standard (refer to section "SECONDARY CONTAINMENT—GENERAL OBJECTIVES" above) that the maximum upstream pressure alarm signal with dry containment systems should be a gauge pressure of 0.7 barg (10 psig).

The graph in Figure 18 demonstrates that with a flow of propane through a 3 mm (0.120 in) orifice and at the maximum differential condition implied by the standard, the flow rate, which is directly related to the primary seal leakage, would be 84.5 l/min (2.98 scfm) or 157 gm/min. While this is still effectively contained by the containment seal, it would be unusual for an operator to tolerate this loss of product. The reality is however that system back-pressures (see below) would reduce this maximum differential. In addition many field-installed orifices have the effective orifice size reduced with process impurities, wax dropout from some hydrocarbon mixtures. The fluid passing through them can often be a multiphase fluid or even sometimes completely liquid. It is thus not surprising in a standard driven by operator experience, the relationship and specification of orifice size and alarm condition are conservatively rated compared to a theoretical prediction.

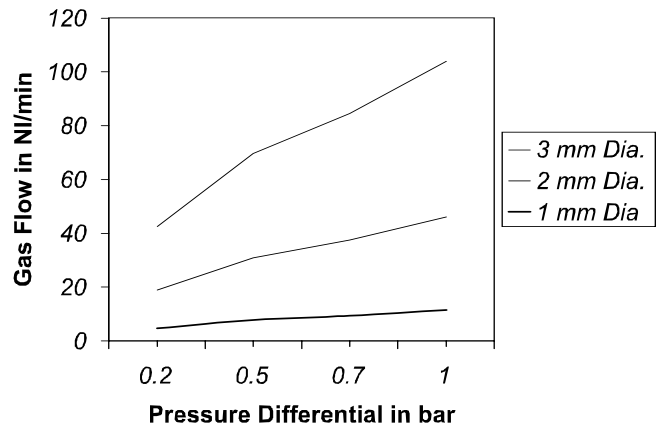

Figure 18. Theoretical Flow Rates of Propane at 20°C (68°F) with Different Diameter Flow Control Orifices.

Some operators may not like to have this level of design compromise, and it is not unusual to have field installations with 2 mm (0.080 in) diameter orifices used in Plans 52, 75, and 76 systems with upstream high-pressure alarm switches or transmitters set at a gauge pressure of 0.5 bar (7 psi). Ignoring the influence of background system pressure, this reduces the theoretical maximum primary seal leakage to a more reasonable level of 30.9 l/min (1.09 scfm) or 58 gm/min (Figure 18).

The pressure alarm setting is influenced by the vapor recovery or flare system condition, which is normally a slightly positive pressure, typically about a gauge pressure of 0.2 bar (3 psig). Normal operating pressures of flare systems vary, however, as does their condition at peaks of usage. It is thus recommended the high-pressure alarm system is based on a differential pressure of 0.5 bar (7 psi) above the mean operating condition in the vapor recovery or flare system. If peak values exceed this setting regularly and the alarm level has to be set to exceed the gauge pressure of 0.7 bar (10 psi), the scope of the draft API 682 Second Edition/ISO 21049 is exceeded (refer to section "SECONDARY CONTAINMENT—GENERAL OBJECTIVES" above). This is then likely to restrict the choice of secondary containment seal to a noncontacting gas lubricated technology or a liquid buffer lubricated system (Plan 52).

Where orifices are used with upstream high pressure alarm switches to monitor and warn of excessive flow with liquids, a 3 mm (0.120 in) diameter minimum size is a practical solution and is advisable in the system recommended on Figure 17. In some

circumstances heating might be required in the location of the orifice to prevent process solidification. Without a high level alarm on Plans 52 and 75, there is a risk the reservoir will overfill and the orifice will experience liquid or a mixed phase instead of the design media, gas. This is a major reason why the draft API 682 Second Edition/ISO 21049 recommends the level warning feature, but without the level alarm the standard's 3 mm (0.120 in) minimum orifice diameter has a stronger practical case for its inclusion.

In all the above cases the high-pressure alarm setting should not exceed the primary seal chamber condition, otherwise it may never provide the planned warning. Care must be taken on services where very low primary seal pressures are encountered, such as the bottom of distillation towers, and alarm settings must be adjusted to consider this issue.

The orifice used with the Plan 72 buffer gas system has a different function; when used in combination with the forward-pressure regulator, it will control the buffer gas flow rate. The level of flow rate used will be a compromise in emission reduction effectiveness and monitoring sensitivity, but a value of between 10 and 20 l/min is a practical guide. To control gas flow rate in this range will require an orifice size significantly smaller than the minimum orifice diameter of 3 mm (0.120 in) specified in the draft API 682 Second Edition/ISO 21049. With a typical pressure breakdown of 0.5 bar (7 psi) between high-pressure alarm point and normal vapor recovery or flare pressure (refer above), buffer flow rates may only be achieved with a capillary orifice design.

The draft API 682 Second Edition/ISO 21049 is a technical and process purchasing recommendation with a defined scope and a practical level of complexity. It is clear from the above discussions that it cannot cater for all eventualities and there must be room for flexibility. It thus presumes it customary for users of the standard to clarify where exceptions to this are necessary or preferred.

Check Valves

Check valves are recommended as a means of preventing reverse flow from vapor recovery or flare systems to the containment chamber on Plan 75 and 76 systems. They are also employed to prevent contamination of quench and buffer gas supply sources in Plan 62 and 72 systems.

Process contamination, slowly acting and low pressure-reversals, plus other factors have been the sources of unreliability with check valves used in some secondary containment systems. In these circumstances plant operators may prefer to remove the presumed reliance on their function by excluding them. This forces recognition of the potential for reverse flow and a more practical judgment of the system's reliability, hazard, and emission-to-atmosphere potential. The vent connection in the historically applied Plan 52 system has never recommended a check valve, and in a survey of vent configurations in existing dry containment seal arrangements (Plan 76), the majority had been assembled without a check valve. Where they have been used, the operator has sometimes chosen to install the valve some distance from the rotating equipment and at a level above the main flare system manifold in an attempt to try to improve its reliability and reduce vulnerability to contamination from upstream sources.

The same sources of unreliability do not occur in quench/buffer supply systems (Plans 62 and 72) and filling of Plan 52 reservoirs. In these circumstances check valves are commonly used to protect supply sources.

The draft API 682 Second Edition/ISO 21049 makes recommendations on all these issues, but there is provision for users or suppliers to take exceptions where their local experience advises this.

SECONDARY CONTAINMENT—DRY MECHANICAL SEAL INSTALLED TESTING

The effective condition of the dry mechanical containment seal is critical to the secondary containment system, and the ability to check and test it is required. The systems described in the above sections *"Plans 75"* and *"Plan 76"* have this feature built in.

Static Testing

A static gas pressure test is the simplest process, and the draft API 682 Second Edition/ISO 21049 recommends a procedure as part of the checks during the seal qualification test process. This is a repeat of the normal API 610/682 air test applicable to primary job seal testing.

The containment seal chamber must first be isolated from the vent and drain systems but retaining the pressure gauge and alarm switch within the test circuit. If there is any risk of liquid being retained in the connecting pipework, this must be drained safely and the test volume depressurized from the normal system condition. Check the pressure rise resulting from static primary seal leakage over a five minute period; the sensitivity is very high on high vapor pressure services. If the rise is less than 0.2 bar (3 psi) the API 610/682 air test can then be applied using a test gas connected through the test connection and pressurizing the containment chamber to 1.8 barg (26 psig). The test volume is then isolated from the test gas and the pressure drop measured over a five minute period. This will give a guide to the seal's condition; this should not exceed 0.14 bar (2 psi) for a containment seal in good condition. The high pressure alarm function can also be checked during the same test. If the pressure drop has a much higher rate, it is advisable to check the condition of other potential leak paths, such as flange gaskets and piping joints, before deciding on a replacement schedule for the containment seal.

A high pressure rise resulting from primary seal static leakage negates condition testing of the containment system using the above methodology but should not necessarily be used as a warning of primary seal failure. The normal operational containment alarms should continue to be the condition monitoring warnings applied to the primary seal.

If the primary seal chamber is at atmospheric pressure during the above test, the test pressure of 1.8 barg (26 psi) will internally pressurize the primary seal and, with some seal designs, this may exceed its design capability. The seal manufacturer will advise a safe alternative pressure but the majority of arrangement 2 configurations can withstand a reverse differential of 1 bar (14.5 psi). This may be a more universal test condition with less risk of consequential problems.

The containment seal chamber should be reconnected to the support system after the test. A weekly check as recommended above will ensure there is confidence in the effectiveness of the complete containment seal system.

Dynamic Testing

It is possible to check the dynamic condition of the primary seal and the containment system but this needs to be confirmed as operationally acceptable. It is achieved in the same way as above by isolating the containment chamber, pressure gauge, and switch from the vent and drain systems. Primary seal leakage should increase the measured pressure, and the rate of rise will indicate the level of primary seal leakage and the effectiveness of the containment seal. The rise is dependant on the process condition and its physical properties, so condition monitoring using this system must be based on specific and locally developed experience and should be combined with an external emission test using EPA Method 21 (1990).

SECONDARY CONTAINMENT—LABORATORY TEST PROGRAMS

Historical testing of containment seals has been carried out by companies based on the market requirements/expectations at the time of development and the marketing strategy of the individual companies. These test programs have also been conducted in various parts of the world each with their "local" market pressures.

Understandably therefore there have been no standard test format and no directly comparable data for the individual designs.

In this section the authors will look at the test work that has been conducted in the past to see what comparisons can be made, and project the performance of the individual designs into the new API 682 standard. Also reviewed will be more recent test work that seeks to give direct comparison between the seals. In this latest program three individual designs of dry contacting seal have been tested (identified in this paper as C-1, C-2, and C-3) and two dry, noncontacting seals (NC-1 and NC-2). Additional material is also available for one further noncontacting seal.

Essentially there have been two major drivers that have influenced the development of containment seals through the last two decades:

- Safety
- Emissions

The earliest specification for dry containment sealing was principally derived from the operating requirements of three major oil companies. The specification required that the seal:

- Must operate for long periods under conditions of dry running (in standby mode).
- Under a gas pressure of 1.7 barg (25 psig) the seal face temperature must maintain a 50°C (122°F) or 25 percent margin relative to the auto-ignition temperature of the product. In the case of crude oil service, this meant that the face temperature must not exceed 130 C°(266°F).
- Gas leakage shall not exceed 0.02 l/min/mm diameter (air at standard temperature and pressure (STP)), liquid leakage shall not exceed 10 ml/min and shall be zero under shutdown conditions.
- Minimum operating lives shall be 12,000 hours at zero bar differential, 1000 hours at 1.7 bar (25 psi) differential, and 20 min at 41 bar (600 psi) differential (liquid at seal face).

More recently containment seal development has been driven by the introduction of emission regulations, particularly in the USA, and supply of containment seals to API 610, Eighth Edition, "in the spirit" of API 682.

The impending revision of API 682 does formally recognize containment seals, details a standard test program, and specifies pass/fail criteria based on predicted operating life and leakage.

Dry Contacting Containment Seals—Historical Testing

Historical testing of design C-1 was primarily based on extended wear testing to confirm the ability of the arrangement to meet the three year life criterion in API 682, First Edition; this work being conducted at mostly ambient pressure but including some pressure testing to assess the effect on life of running on pressurized vapor. A secondary API 682 style test program was carried out that included evaluation of the seal's ability to continue to perform leak-free following "upset" conditions, i.e., primary seal failure.

The test program involved over 8000 hours of running in the laboratory along with coordinated field programs. Face temperature rise (measured using a thermocouple 0.78 mm (0.03 in) from the sealing faces) was found to be just 1.1°C (2°F). Wear readings from the carbon face during a 3000 hour test program verified a service life in excess of three years and that gas pressures to 1.5 bar (22 psi) could be sealed with corresponding decrease in service life of less than 15 percent. The seal remained leak-free during alternate wet/dry tests, pressure tests, and on completion of the program the seal held static pressure drop to within the 0.14 bar (2 psi) drop specified for new cartridge seals (refer to section "SECONDARY CONTAINMENT—DRY MECHANICAL SEAL INSTALLED TESTING" above). Within the overall program the containment seal was also tested as part of a tandem assembly with a pressure of 0.3 bar (5 psi) between the primary and containment seals to simulate flare back pressure, and then tested with the containment seal running on propane at 17 bar (250 psi) to simulate primary seal failure. During both tests, emissions were maintained to virtually zero ppm.

The conclusions of the test program were that design C-1 seals would meet the API 682, First Edition, three year life criterion for sealed (vapor) pressures up to 0.3 barg (5 psig) and would hold static pressure (liquid or vapor) to API 682 test requirements after extended running.

Design C-2 has gone through a number of test programs including development to meet the original specification, API 682, First Edition, style "qualification" testing and simulated life-cycle programs.

The primary objectives of the original test program were to confirm that the seal face temperatures and wear did not exceed the specification. Temperature was measured by use of a thermocouple embedded in the carbon face and the test showed that an 80 mm (3.25 in) size seal could be run at up to 4300 rpm without exceeding specified maximum temperature of 130°C (266°F). Under normal conditions the face temperature increased less than 25°C (45°F) during the test and leakage was zero (emission measurements were not part of this program). Wear life was found to exceed three years at ambient pressures and exceed two years at vapor pressures up to 0.5 barg (7 psig).

API 682, First Edition, style testing has also been carried out based on the cycle for a single seal, i.e., 100 hours run at ambient (for the containment seal) pressure, static test, and cycle run with measurements made of wear and leakage (emissions). Maximum emissions measured during tests were 77 ppm with most testing conducted at emission levels of less than 10 ppm. As testing was short duration, wear measurements were not made.

The final test program was a simulation of a life cycle for a containment seal, including an assessment of upset conditions that could be encountered. To make the test more severe the installation was made without a primary seal and the test carried out direct onto the containment seal, i.e., operating it as a single seal. A typical cycle comprised static and dynamic tests on butane, air, and water. Table 2 shows a typical cycle with emissions measurements during the butane cycles, liquid leakage measurement for the water cycles, and continuous monitoring of seal face temperature.

Table 2. Typical Test Cycle and Performance—Dry Containment Seal C-2.

Test	Static/ Dynamic	Test fluid	Pressure bar (psi)	Run min.	Face temp. ºC	ml/hr	ppm
1	s	Butane gas	1.2	5	----	----	7
2	d	Butane gas	1.2	10	61	----	8
3	d	Air	0	120	84	----	----
4	d	Air	2.0	120	77	----	----
5	d	Water	40.0	15	48	0	----
6	d	Air	2.0	60	75	----	----
7	d	Butane gas	1.2	10	65	----	3
8	d	Water	40.0	10	52	0	----
9	s	Butane gas	1.2	5	----	----	0

During 19 test cycles the maximum face temperature was 94°C (201°F), recorded during the ambient pressure run and the highest emission levels 8 ppm. No liquid leakage was ever recorded. Recording highest temperatures at ambient pressure occurred consistently. This may have been due to the effect of new seals bedding in or hydrostatic effects. This was not evaluated as part of the test program.

Design C-3 historical testing was initially based on the specification laid down by the oil companies with measurements centered around seal face temperature and leak rates. Following this work the program was revised to include an extended test that involved running for 3300 hours on vapor at a pressure of 0.4 barg

(6 psig), and this was followed by short runs at 2.1 barg (30 psig) and 7 barg (100 psig). Over the life of the 3300 hour test, the average leak rate was found to be 1.4 ml/min (5×10^{-5} scfm) with highest leakage levels recorded during the seals "running in" period. Increasing the sealed pressure to 2.1 bar (30 psi) increased the leak rate to 40 ml/min (0.0014 scfm) although the length of test was not sufficient for the seal to bed in under these new conditions. Detailed wear tests were not made though checks indicated a similar scenario to the leakage, i.e., wear was heaviest during running in after which it settled to a regular low rate.

A second test program was initiated based around the API 682, First Edition, requirements. In this program the containment seal was operated outboard of a single seal with seal chamber pressure maintained at 2.1 bar (30 psi) above vapor pressure. The assembly was run for 100 hours with the containment seal at ambient pressure and subjected to a series of 25 stop/starts. During the test cycle the primary seal was also "forced to fail" resulting in emission values in excess of 10,000 ppm between the primary and containment seals. Outboard (EPA Method 21, 1990) emissions were constantly monitored and never exceeded 50 ppm during this work.

Dry Noncontacting Containment Seals—Historical Testing

Design NC-1 was originally tested using an 82.5 mm (3.25 in) seal as part of a program that simulated the operating conditions that could be found in a working plant. The first part of the program involved testing the seal at varying speeds and containment cavity pressures (nitrogen) to determine the gas flow across the faces. Speeds were 0, 1500, and 3000 rpm and pressures 1.5, 4, 8, and 12 bar (22, 58, 116, and 174 psi).

Development of the seal using finite element and modeling techniques was carried out during the test program; as the seal is noncontacting, then wear was not an issue. The final seal design targets were based on pressure and speed performances and leakage of both gas and liquid. In fact very small temperature increases were recorded with increasing speed primarily due to windage effects. As a containment seal would normally be connected to a flare or vapor recovery system, then target gas pressure capabilities were set at modest levels, in fact seals were found to operate at pressures beyond 10 bar (145 psi) without problems.

Results indicated that at 3000 rpm gas leakage was 57 ml/min (0.002 scfm) at 1.5 bar (22 psi) sealed pressure (3× higher than normal flare back pressures, which is what the seal would be expected to operate at). At the same conditions wet leakage was found to be approximately 50 ml/min dynamically with no leakage on static test. The wet run is considered abnormal operation, i.e., representing primary seal failure, while the static performance is required to maintain a leak-free pump after shutdown.

A second series of tests investigated leakage (gas and liquid) at varying speeds and pressures, and also measured seal face temperatures. The overall gas leakages are given in Figure 19.

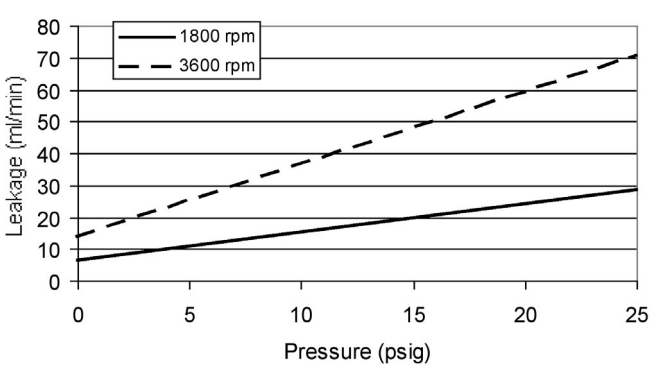

Figure 19. Dry Noncontacting Seal Gas Leakage.

The seals can be seen to leak at zero pressure. At 3600 rpm this leakage was measured at 15 ml/min (0.00053 scfm). This flow is due to the natural pumping action of a machined face seal (at zero rpm this leakage fell to zero). Temperature rise at the seal faces was recorded at up to 2.8°C (5°F) above inlet gas temperature.

In a final series of tests seal NC-1 was operated outboard of a standard pusher seal being operated on propane at 17 bar (246 psi). The first phase of this series involved operating with a simulated flare back pressure of up to 0.34 bar (5 psi). Actual test pressure was cycled between 0.28 bar (4 psi) positive and vacuum. EPA Method 21 (1990) measurements recorded maximum emissions of 174 ppm one hour after startup and near zero emissions for the remainder of the test (total cycle time approximately 100 hours). The second phase of the test used the same arrangement but was a static test. Maximum recorded emissions were 13 ppm.

The final cycle involved a simulated primary seal failure so that the noncontacting containment seal was operated on propane at 17 bar (246 psi) for 50 hours. Even during this phase emissions were held below EPA limits with maximum recorded values of 810 ppm. Testing also confirmed that the seals were not damaged by operation under vacuum.

Noncontacting seal NC-2, a short unbalanced seal design, was originally tested against three operating criteria, the seals capability to perform on gas, on liquid, and under vacuum. Gas testing was conducted on dry nitrogen or mains air, and a target maximum pressure set at 3 bar (44 psi). The seals actually performed to over 12 bar (174 psi) without problems. A two inch seal at 3000 rpm gave gas leakage of less than 80 ml/min (0.0028 scfm) at the 3 bar (44 psi) specification.

The specification for test on water was that the seal should survive 40 bar (580 psi) liquid pressure for 24 hours. This target was achieved with water leakage of approximately 10 ml/min on a two inch seal at 40 bar (580 psi). Attempts to make this seal fail were unsuccessful when the seal survived operation at the upper limit of the test rig (70 bar (1015 psi)). Wear recorded was low and thought to be the result of particles in the water.

Noncontacting gas seal grooves are effectively a small pumping device and, if the seal is operated outside a closed chamber, a vacuum can be generated. Under such conditions one needs to know that the seal will not be damaged either by running on vacuum or by the vacuum reaching a level whereby air is drawn past the seal and back into the chamber. Test verified the seals ability to operate down to a chamber pressure of 0.3 bara (4.3 psia) without risk of damage.

Young, et al. (1996), reported on development of a noncontacting seal for emission control and safety containment. The seal test program encompassed a variety of fluids from air, through gaseous and liquid propane to water, and sealed pressures from zero to 41 bar (600 psi). Test parameters included gas and liquid leakage and temperature rise at the seal faces.

Gas testing at speeds up to 3600 rpm gave increases in seal face temperature up to 3.5°C (6°F), independent of seal size and pressure. Testing of a 2.375 in seal on propane gas gave measured emissions of <100 ppm at 0.34 bar (5 psi), rising to 400 ppm at 1.4 bar (20 psi). Wear was reported as "not measurable" although the duration of the test is not confirmed. Liquid testing was at high pressure, 20.7 bar (300 psi) for liquid propane and 41 bar (600 psi) for medium oils. Under propane test, emissions were measured at roughly 10,000 ppm and on oil the seal leaked about 2 ml/min.

API 682, Second Edition, Qualification Tests

The qualification test program is quite severe and currently comprises:

- A minimum 100 hour run at 3600 rpm and ambient pressure (during the base pressure test cycle for the primary seal).
- Run at ambient pressure during the cyclic test of the primary seal.

- Run for a minimum of 100 hours at 3600 rpm and a gas pressure (propane) of 0.7 bar (10 psi).
- Static test at 1.8 bar (26 psi) for a minimum five minutes.
- Run for a minimum of 100 hours at 3600 rpm on diesel fuel at 2.8 bar (41 psi).
- Static test on diesel fuel at 17 bar (246psi) for a minimum of four hours.

Total test duration was of 300 hours minimum plus the cyclic test program.

As containment seals had been developed over a period of years, to varying specifications and market requirements and on different test apparatus, it was decided to carry out a series of screening tests. This would be in advance of the final issue of the API 682 Second Edition/ISO 21049 qualification test procedure and would compare performances. The test procedure adopted was chosen to reflect the expected qualification test and provide feedback on the three critical areas of wear, emissions, and liquid leakage.

The test arrangement is shown in Figure 20. Seals were tested back-to-back on a double ended test rig. No primary seal was fitted. Test cycle operated was:

- Dynamic at 3600 rpm and ambient pressure for 100 hours minimum.
- Five stop/start tests with a five minute run between stops.
- Dynamic test at 3600 rpm and 0.7 bar (10 psi) on air for 100 hours minimum. This test to include short periods of running on propane gas to check emissions at the start, at midpoint, and at the end of the cycle (this procedure was adopted for safety reasons as the propane test rig was not available at the time of testing).
- Dynamic test on light oil at 2.8 bar (41 psi) for six hours.

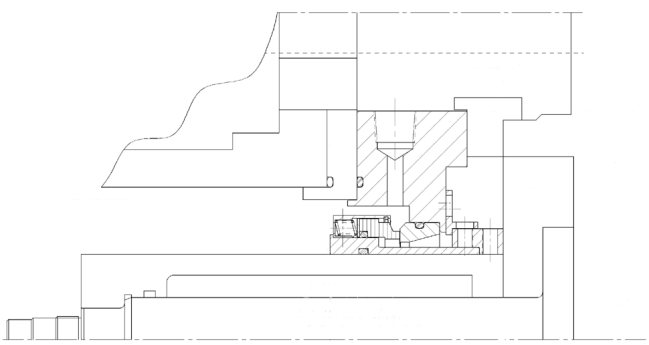

Figure 20. Test Arrangement for API 682, Second Edition, Screening Tests.

Contacting Containment Seals

Seal wear over the duration of the qualification test has the potential to create problems for the manufacturer as the specification requires no more than 1 percent of the total wear allowance to be used. Highest wear rates for seals, outside abnormal operation, occur when the faces are "bedding in" at the start of the seal's life. Flitney and Nau (1986) reported average seal face wear rates during bedding in to be approximately 10 times higher than during normal operation. Total wear of 0.064 mm (0.0025 in) was measured during the bedding in phase of operation, this figure equating to between 2.5 and 4 percent of seal life. While seal design and materials have advanced considerably since this study, it is evident that achieving a maximum 1 percent wear over a short seal test is extremely difficult, and 1 percent wear measured during a phase when the seal is bedding in does not necessarily equate to 1 percent seal life.

In fact the results of this short comparative test program more than confirmed this condition with all designs failing to achieve the maximum wear specification during the first set of testing. Originally it had been planned to conduct a single series of tests to provide comparable data between the seal arrangements. However, due to some operational problems with the test arrangement, some tests have been repeated and others are in progress. Regrettably therefore full conclusions cannot be drawn within the timeframe of completing this paper.

Testing of seal C-1 resulted in levels of wear exceeding API 682 Second Edition/ISO 21049 targets. If however one deducts the expected bedding in wear, the seal would exceed the three year life criterion. A second test of this design produced very low wear, well within the qualification test requirements.

Seal C-2 failed the wear test with heavy wear related to running in "over dry" conditions. This is discussed further below.

Similarly wear rates for seal C-3 exceeded specification. Projected performance improved by removing the bedding in element, though this did not improve sufficiently to "qualify" the seal.

As will be seen in the next section of this paper (relating to field experience), the wear results from the tests do not reflect what happens in a working plant, and in fact are highly contradictory to data that have been provided by European and USA operators who are using the three seal designs tested. There are three probable contributory factors to this difference: bedding in, running on dry air, and the severity of the 0.7 bar (10 psi) test. These are explained in more detail below.

While the bedding in element of seal wear may not be as severe as reported above, the general principle still exists that all seals go through an initial period of high wear at a rate considerably greater than normal, steady-state rates. Quantifying this wear is however beyond the scope of this paper.

Contacting containment seals are designed to work with a minimum but not an absence of lubrication. In normal operation this lubrication is provided by the small levels of leakage that any primary seal permits, sometimes in the form of liquid droplets, often as hydrocarbon vapors. With the correct combination of materials, the lubrication provided by vapor leakage is sufficient to reduce seal wear considerably. By running this test program on atmospheric air, an environment has been created where the seal creates a warm, dry environment and wear is promoted. This was confirmed by visual examination of tested components, which in extreme cases showed heavy grooving associated with insufficient lubrication.

This potential for dry wear will also be exaggerated by the 0.7 bar (10 psi) test, which reflects an extreme condition compared with normal duty conditions.

The standard also sets a maximum emission level of 1000 ppm during the propane gas (0.7 bar (10 psi)) test cycle. For safety reasons it was not possible to run continuously on propane gas, and emissions checks were confined to three or four spot checks per test. In line with the high wear conditions seen, EPA Method 21 (1990) emission measurements showed considerable fluctuation with readings varying between 15 and over 1000 ppm. In one run while one seal allowed emissions in excess of 1000 ppm throughout the test, the other maintained emission levels at near zero. In another test emissions varied considerably with average emissions recorded at 390 ppm and 440 ppm.

Liquid leakage was very low for valid test cycles with recorded leakages varying between zero and 0.4 ml/min.

Noncontacting Containment Seals

Test of the two styles of noncontacting seals gave similar results. Both seals completed the test program with no wear, though one seal showed some face marking (believed to be the result of a particle getting between the seal faces).

Emission measurements during the "propane" cycle maintained consistent levels throughout the test, with one seal leaking 80 ppm and the other 200 ppm, well within the specified limit of 1000 ppm.

The qualification test minimum performance requirements only require liquid leakage from the containment seal to be recorded and does not specify acceptable leakage levels. Leakages recorded were consistent with levels experienced during original development program (refer to section *"Dry (Gas Lubricated) Mechanical Seals"* above).

Clearly the results to date indicate that noncontacting seals will pass API 682 Second Edition/ISO 21049 qualification tests, whereas dry contacting seals may not successfully achieve the wear requirement. Evaluation tests are ongoing to establish if any one of the listed reasons dominate the cause of this occurrence, and the results of this work will be presented when available.

SECONDARY CONTAINMENT— FIELD EXPERIENCE AND EVOLUTION OF SELECTED CONTAINMENT SEALS

Dry Contacting Containment Seals

The dry running containment seals included in this operational review have been applied extensively across a broad base of industries and duties. Design C-1 has been supplied as part of a "standard API cartridge" in tandem with API 682, First Edition, qualified single seals and in "engineered cartridges" for designs using alternative pusher seals. Design C-2 has been supplied as part of a "standard API cartridge" in tandem with API 682 qualified single seals, in "engineered cartridges" using alternative pusher and bellows seals, and as a "bolt-on" assembly. Design C-3 has been supplied as part of an "engineered cartridge" in tandem with API 682 qualified bellows and as a "bolt-on" assembly using alternative pusher and bellows seals.

The primary application of dry contacting containment seals has been for safety and emission control on refineries and petrochemical plants. Within those environments the emission performance of the seals has been evaluated and compared with alternative sealing arrangements (Bowden, 1998). Data collected from (primarily European) plants indicated that 72 percent of containment seal assemblies maintained emission levels below 50 ppm, 89 percent below 500 ppm, and 95 percent below 1000 ppm. When reviewed specifically against light hydrocarbon duties with sg <0.5, Figure 21 shows the difference in performance for single seals (both general purpose and emission control designs) and assemblies with containment mechanical seals.

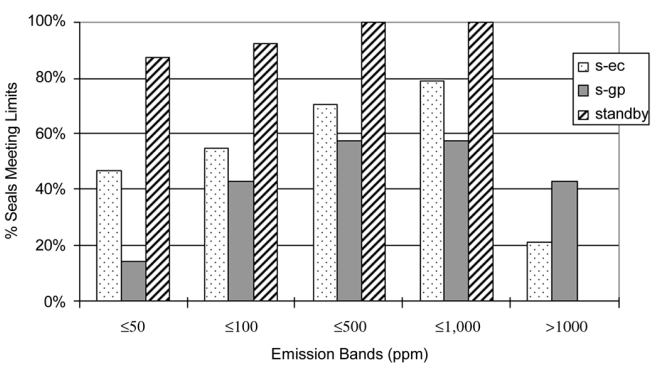

Figure 21. Emission Performance for Dry Contacting Seals on Fluids with SG ≤0.5.

Data now available bring together operational experience for 440 containment seals with both emission control performance and reliability experience.

Reliability data, mean time between failures (MTBF—which indicates failure of the mechanical seal) and MTBR (which is repair/replacement of the seal and includes seals that did not fail) are not directly comparable plant to plant. Differing techniques for measuring these parameters mean that no one set of data can be compared with another, i.e., an indicated MTBR of five years on one plant is not necessarily better than an MTBR of four years from another plant. This is because they may have been calculated different ways or may include different levels of data input. While greater correlation is to be found with emission measurements (EPA Method 21 (1990) being the common standard throughout the world), regulatory requirements do differ between countries and states and methods of reporting vary. While in the USA regulations are directed at control of fugitive emissions and emissions monitoring is mandatory, in Europe, Farmer (1998) reports that the Integrated Pollution Prevention and Control (IPPC) directive relates more to control of specific, hazardous products. Requirements to make and record emission measurements differ therefore between the USA and Europe and availability of data differs.

For the purpose of this review reliability experiences have been summarized for individual plants rather than attempt to combine these data. For emissions, performance of individual plants has been compared with the previously compiled data set. While unable to make a detailed analysis, an overview of EPA compliance has also been produced using a combined data set.

The first example of operational experience of containment seals comes from a plant in the USA. This operation includes a total of 125 dry containment seals on duties ranging from light hydrocarbons with sg down to 0.44 through heavier hydrocarbons to contaminated aqueous solutions with sg of 1.0. Approximately 25 percent of all applications are on products with sg of 0.6 or less.

Different units on the plant are licensed at different permissible emission levels depending upon the process and age of the unit. These levels are changing, with unit permissible levels getting lower with time. Many units are at a 500 ppm level, some are at 1000 ppm, and a very small number are still at 2000 ppm. Emissions data available at the time of writing are not sufficient for detailed analysis. However it can be determined that the 125 containment seals have been subjected to a total of 910 inspections, and leakage from the containment seal has been identified visually or by instrument on 59 occasions. This gives a "pass rate" of 93.5 percent. Interestingly, for duties where the sg of the pumped fluid is less than 0.6 (i.e., those where emissions would be expected to be more likely an issue), over 96 percent of measurements gave a "pass."

Reliability data available from the plant provide a means of estimating MTBR of seal assemblies, which include dry running containment seals. These data are presented as MTBR that include replacement of the containment seal due to failure of the primary seal or other pump components. MTBF for the containment seal will be significantly higher (containment seal failure was identified in less than 62 percent of repairs undertaken).

Recorded seal MTBR for seal assemblies with containment seals in the plant averaged at slightly over 62 months. Applying the analysis to seals in duties of 0.6 or less, one finds that MTBR does fall slightly to 55 months, although failure of the containment seal was only identified in 20 percent of all cases.

One can therefore conclude that containment seals on this plant exceed both the emissions (assumed to be EPA 40 CFR 60 (1990)) and reliability targets of API 682 Second Edition/ISO 21049.

A second example of end user experience of dry containment seals is available by reference to a European plant. Following an initial emissions study and practice review, the plant undertook an upgrade program for one unit that resulted in the installation of dry containment seals on 83 duties. The application "mix" of these pumps is very similar to that indicated for the USA plant above.

The performance of the unit was subject to regular monitoring after startup, the average emission performance achieved, and data for the most recent survey are given in Table 3.

Unfortunately definitive reliability data are not available for the containment seals in this plant. Overall data supplied by the plant from a review of records indicate an MTBR of 26 months. This

Table 3. Emission Performance of Dry Contacting Seals in a Process Plant in Europe.

Emissions Recorded	Overall Performance	Last Survey
100 ppm or less	75.2%	83.8%
500 ppm or less	86.0%	90.3%
1000 ppm or less	94.3%	96.8%
over 1000 ppm	5.7%	3.2%

figure however includes failure of not only the primary and containment seals but all pump components, e.g., bearings, operational failures, etc., and therefore reflects seal maintenance or repair undertaken for any reason. Many of the pumps indicate MTBRs of just a few months and in some cases less than one month. It is believed that the figures presented do not accurately reflect seal reliability in the plant, particularly as the plant is continuing to upgrade single seals (to date 109 mechanical containment seals have been installed).

A third example of operational experience comes from the Asia Pacific region. This is of particular interest as the plant was built using seals designed to comply with API 682, First Edition. While this did not include direct provision for containment seals, a total of 67 have been supplied as engineered arrangements having been tested generally to API 682, First Edition, standards prior to shipment.

Of the 67 seals, 28 percent are on applications with a pumped fluid having a sg of 0.6 or less (so similar to the above plants, though only 16 percent of applications are for sg's above 0.8). Mechanical containment seals are therefore primarily used on light to medium hydrocarbon duties in the plant. As local regulations do not require emissions monitoring, no specific measurement data are available.

Since startup in mid 1996, the plant has repaired/replaced containment seals on 78 occasions. Replacement has been carried out on failure of the primary seal, containment seal, and as required for other pump components, so we again have an MTBR for the seal assembly rather than an MTBF for the seal or containment seal. This MTBR works out at 46 months exceeding the target set within API 682. The trend of failures in the plant does however indicate that the MTBR of the mechanical containment seals is increasing. Wallace, et al. (1999), reported on a reliability program that had been undertaken involving both plant and supplier personnel. In this program a team comprising operations, maintenance, integrated maintenance inspection (IMI), and the seal vendor reviewed failures, identified causes, and recommended solutions. At the time the team was formed, overall seal MTBR was less than three years. Latest data indicate that this has risen to over 12 years. This improvement can be seen in an analysis of containment seal assembly replacements. Following startup five and a half years ago, 22 percent of seal repair or replacements were made in the first six months of plant operation, and 77 percent occurred during the first two and a half years. If the calculation were started from January 1, 1999, one would get an MTBR of nearly 10 years for the containment seal assemblies! While this figure is clearly distorted by the measurement period, the distribution of failures (over three-fourths of replacements in the first half of the measurement period) clearly indicates MTBR improving beyond the current 46 months.

Data from the European and Asia plants perhaps sends a strong message. While API 682 is clearly a very important standard that has made a positive contribution to seal performance, it is not a "fit and forget" solution. Continued performance improvements are best maintained by installing the right solution and initiating an ongoing program to continue to improve.

API 682 is naturally based on improving performance of mechanical seals during normal working conditions, in the case of containment seals "normal" performance can be considered beyond a long backup life and the question asked how well does it function if the primary seal fails? Bowden (1995) reported on field experience with a limited number of seal assemblies where partial or complete failure of the primary seal had occurred and the levels of emission control being maintained by the containment seal (Table 4).

Table 4. Dry Contacting Seal—Emission Control on Primary Seal Failure.

Fluid	Pressure bar (psi)	Fluid s.g.	Temp. ºC (ºF)	Containment cavity pressure bar (psi)	Emissions ppm
Isobutane	1.72 (25)	0.58	16 (61)	5.9	0
Propane/ butane	17.2 (250)	0.52	43 (109)	0.5	218
Lt hydrocarbons	14.6 (212)	0.46	43 (109)	0.14	295
LPG	15 (218)	0.52	15 (59)	>10,000 ppm	0
LPG	22.9 (332)	0.44	41 (106)	>10,000 ppm	0

In the case of the isobutane application a serious failure of the primary seal has occurred but, as with the other applications, emissions are maintained within EPA limits.

Some other experiences reported from field experience are summarized below. These experiences are necessarily brief as equipment is normally shut down within a relatively short time of discovering primary seal failure.

- A USA pipeline operator reported a process upset caused failure of the primary seal after two years' operation. The containment seal held process fluid at 55 bar (800 psi), permitting a controlled pump shutdown.
- A European oil company reported failure of a primary seal leading to activation of the pressure alarm. The pump could not be shut down immediately and continued to operate under alarm for two months without leakage until shut down was possible.
- A USA operator reports failure of the primary seal, which would normally have required pump shut down, but by running on the containment seal it was possible to keep the pump in service for over one week to prior maintenance.

Dry Noncontacting Containment Seals

The noncontacting containment seal is a comparatively new product compared with the contacting design. Field experience is therefore much less available and detailed—in the seal business it is often the case that the only time you hear of a problem is when things are going wrong!

The dry noncontacting seal is generally used for gaseous rather than liquid or mixed phase fluids and is especially favored for flammable environments where auto-ignition is a concern. Although plantwide use has been made of noncontacting containment seals many have been supplied in small numbers at individual plants, often on applications where other seal designs have performed poorly. Once the seal is installed, operating focus tends to move to the next problem and close monitoring reduces.

As detailed reliability and emissions data are not readily available, in this section the authors will therefore confine the review to some specific application experiences.

In the Middle East noncontacting containment seals were supplied for six pumps in liquified petroleum gas (LPG) service (deethanizer reflux fluid sg 0.4 and debutanizer reflux fluid sg 0.45). These are high-pressure services over 33 bar (479 psi) suction pressure with low pressure differentials (37 bar (537 psi) discharge). Following supply, over four years ago the primary seal suffered a number of failures relating to flush and installation problems. Following initial resolution of these issues the dry noncontacting containment seals have performed without problems despite occasional ongoing problems with the seal flush, which have led to some running difficulties with the primary seals.

At the same plant, four noncontacting containment seals of the same design have been installed on debutanizer overhead duties (sg 0.496). These applications are a little less severe and consequently there have been no operating problems. The seals have been in operation for over three years without problems.

A plant in Germany is operating noncontacting containment seals on ammonia (99 percent) at 22 bar (319 psi) and −34°C (−29°F). This arrangement was installed to replace a dry contacting containment seal that was suffering from heavy wear and failing between two weeks and six months. The seals are being run without a nitrogen flush. The noncontacting seals have now been running for two years without problem.

Noncontacting seals are being used on a refinery in France on propylene (sg 0.45) duties. Emission measurements have been made on these seals and found to be below 100 ppm without the application of a nitrogen (or other inert gas) buffer gas. Generally the seals are removed from service soon after failure of the primary seal. They have however been operated up to three days without problems when required.

Young, et al. (1996), reported on field experience with a dry noncontacting containment seal on a plant in France. Operating experience was limited but primary seal failure on one pump in 28 bar (400 psi) methane/ethane service had occurred, and the containment seal had run for three hours leak-free until shut down.

SECONDARY CONTAINMENT—PERFORMANCE SUMMARIZED AND COMPARED WITH LIQUID BARRIER/BUFFER DUAL SEALS

As indicated earlier, data included in this paper come from a variety of test programs that were undertaken at varying times. The capability to make direct comparisons is therefore somewhat limited. Equally field data, while invaluable as an indicator to performance under real life conditions, will vary with regulatory and operational practices across continents and operators. Any attempt to compare must therefore be recognized as offering only an outline guide rather than a definitive comparison.

The two fundamentals sought by API 682 are long life and emission control. Comparison shall therefore be restricted between those two sets of data. As much of the test work was conducted "preemissions" then leakages were either not measured directly or were quoted in varying units. Within the paper are examples of gas leakages quoted in ml/min. These can be converted to approximate ppm figures using Equation (1):

$$Leakrate\ gm/hr = 0.02784\,(SV)^{0.733} \tag{1}$$

where SV = screening value in ppm.

This formula is derived from the US EPA and work carried out in the CMA/STLE joint study (European Sealing Association, 1995).

Conversion of gm/hr to ml/min was calculated using Equation (2).

$$gm/hr = ml/\min \times 60 \times \rho/1000 \tag{2}$$

where ρ = gas density and is assumed as propane at 1.97 gm/l.

For contacting containment seals one consistently sees low emission levels recorded and this is shown in Table 5.

Table 5. Inhouse Testing—Emission Levels for Dry Contacting Seals.

Containment cavity pressure bar (psi)	10000 ppm	0 (0)	0 (0)	0.3 (4.3)	1.7 (25)	2.1 (30)	17 (247)
Emissions measured ppm	<50	11	3 to 77	0	<10	1080	0

With the exception of the 2.1 bar (30 psi) test on seal C-3, all emissions recorded were very low. Testing on C-2 involved many samples with most measurements below 10 ppm but 77 ppm being the highest recorded. For noncontacting seals one sees leakage data generally higher with quite a large scatter. This is shown in Table 6.

Table 6. Inhouse Testing—Emission Levels for Dry Noncontacting Seals.

Containment cavity pressure bar (psi)	0 (0)	0.28 (4)	0.34 (5)	1.4 (20)	1.5 (22)	3 (44)
Emissions measured ppm	285	174	100	400	1748	2772

If performance is compared at a flare back pressure of 0.5 bar (7 psi) the contacting containment seal indicates that it will limit emissions to <50 ppm, while the noncontacting seal would be expected to permit emission levels of perhaps 200 to 300 ppm. Attempting to relate this performance to field experience, measurements show that from the original survey work over 70 percent of containment seals leaked less than 50 ppm. The latest data from the Italian plant indicated that nearly 80 percent achieved this performance indicating a good level of correlation. Unfortunately insufficient data are available for noncontacting seals to permit similar comparison.

Kittleman, et al. (1994), reported the findings of seal survey work for the CMA/STLE Pump Seal Mass Emissions Study. Within the study were emission measurements on 44 double seals (no differentiation was made between pressurized and unpressurized dual seals), which reported that one seal out of the 44 exceeded an emission limit of 1000 ppm. Fone (1993) reported field emission measurements on 27 dual seals (four pressurized, 37 unpressurized) following periods of six and 12 months in operation. All measurements were of less than 1000 ppm. Bowden (1998) reported field emission measurements on 127 dual seals (19 pressurized and 108 unpressurized) with only one seal from the sample exceeding 1000 ppm. Combining the latter two reports, which contain sufficient detail for analysis, the overall performance of 154 dual seal measurements can be summarized in Table 7.

Table 7. Field Emission Performance of Dual (Pressurized and Unpressurized) Seals.

	≤ 50 ppm	≤ 100 ppm	≤ 500 ppm	≤ 1000 ppm	> 1000 ppm
Qty	141	147	152	153	1
%	91.5%	95.5%	98.7%	99.4%	0.6%

Bowden (1998) also reported on the field emission performance of 201 single seals with dry containment seal (dry tandem). The results of this survey are summarized in Table 8.

Table 8. Field Emission Performance of Dry Containment Seal.

	≤ 50 ppm	≤ 100 ppm	≤ 500 ppm	≤ 1000 ppm	> 1000 ppm
Qty	144	156	178	191	10
%	71.6%	77.6%	88.6%	95.0%	5.0%

These data on containment seals have now been updated including field data on a further 239 seals (although not with full emission records for all seals). Containment seal performances derived can be summarized in Table 9.

Table 9. Field Emission Performance for Dry Containment Seals—Extended Data Set.

	≤ 100 ppm	≤ 500 ppm	≤ 1000 ppm	> 1000 ppm
Italian plant overall	75.2%	86.0%	94.3%	5.7%
Italian plant (latest)	83.8%	90.3%	96.8%	3.2%
USA plants *			93.5%	6.5%

* Data available only records EPA pass or fail, while some data is for an EPA limit of 500 PPM it has been assumed that all are at 1000 PPM for this comparison

The combined data set for containment seals therefore gives us 93.8 percent of mechanical containment seals meeting current EPA emission targets.

Comparative data for reliability between dual contacting wet seals with an unpressurized buffer and dry mechanical containment seals are not available. Indeed differing methods of calculation for individual plants makes compilation of an overall data set impossible. Reliability data available have however given MTBR performance for dry containment seals of 62 months for one USA plant, 26 months for an Italian plant (data suspect), and 46 months for an Asian plant. With the exception of the Italian data, MTBR figures are well above the target set in API 682. Since the figures include seal replacements due to nonseal problems, it can be concluded that containment seal MTBF figures are considerably higher.

Cost of Ownership

If, as the data indicate, typical MTBRs for dry mechanical containment seals are around five years, then it is reasonable to suggest that they are not far behind conventional dual contacting wet seals in operational life. So are they a real option for modern process plants? It is well beyond the scope of this paper to attempt to identify when applications demand a dual contacting wet seal with unpressurized buffer to be installed, but if just duties are considered where a dry mechanical containment seal is an option, does this offer the operator savings?

Data compiled with the help of major US operators in recent years indicate that it can. A typical (rounded) purchase cost for a basic API Plan 52 seal system comprising vessel, instrumentation, valves, pipework, and support has been calculated at $2900. In comparison a typical Plan 76 system would cost $1150. Installation of the Plan 52 calculates at $500 while the Plan 76 is $200. Cost of operation including barrier fluids, cooling water, and routine maintenance costs $950 for the Plan 52 compared with $100 for the Plan 76.

Thus savings from the cost of ownership can be estimated as one off installation savings of $2000 with annual savings of $850.

CONCLUSIONS AND RECOMMENDATIONS

Operational experience combined with ongoing improvements in containment seal design and performance has led to recognition of the capabilities of containment seals and their inclusion in API 682 Second Edition/ISO 21049. Both inhouse testing and more importantly operational experience have verified the capability of containment seals to exceed the performance targets in API 682, although this capability has failed to be confirmed by the recent test program, which requires further investigation.

- Dry contacting containment seals:
  - Provide emission control to very high levels with over 70 percent achieving <50 ppm and approximately 95 percent <1000 ppm.
  - Will seal high pressure liquids but have limited capabilities on high pressure gas.
  - Can maintain emissions well below EPA levels in the event of primary seal failure.
  - Provide effective leakage containment of liquids, gases, and fluid mixtures.
  - Have reported MTBRs of four to five years.
  - Have lower installation and operational costs than dual (liquid) seals.
- Dry noncontacting containment seals:
  - Give better performance on high gas pressures.
  - Are more tolerant of pressure variations when the seal is connected to flare.
  - Give negligible wear.
  - Achieve low levels of dynamic leakage (well within EPA limits).
  - Can maintain emissions well below EPA levels in the event of primary seal failure.
  - Are the default selection in API 682 Second Edition/ISO 21049.

System piping diagrams have been updated with the inclusion of new plans for containment (and pressurized gas) seals in API 682 Second Edition/ISO 21049.

Application of buffer gas systems can be made where emission of process gas to atmosphere must be minimized (e.g., when H_2S contaminated) or where additional containment is desired on failure of the primary seal. They can also be applied when additional protection is required for the containment seal faces from primary seal leakage. When the seal is operated at below freezing temperatures the buffer is better applied outboard of the seal faces.

Operators may choose to deviate from standard systems to meet their own operational preferences and requirements. It is recommended that application of some key elements of the system are always considered:

- Pressure indicators are important for visual checks on seal integrity and for condition testing.
- Alarms (either pressure or flow dependent on the nature of leakage) are important for safety and to give warning of possible seal problems.
- Test connections will facilitate condition monitoring that will provide advance warning of performance deterioration.
- Orifices are interconnected with alarm systems but may be sized differently by operators relative to their experiences. Correct sizing should be determined by consideration of the nature of the fluid that will pass through the orifice and the potential for blockage.
- Check valves have been the source for some operating reliability problems and are often excluded, leading to the potential for backflow from the flare to the seal. An option is to site the valve some distance from the rotating equipment and above the level of the flare system manifold.

REFERENCES

API Standard 610, Eighth Edition, 1995, "Centrifugal Pumps for Petroleum, Heavy Duty Chemical and Gas Industry Services," American Petroleum Institute, Washington, D.C.

API Standard 682, First Edition, 1992, "Shaft Sealing Systems for Centrifugal and Rotary Pumps," American Petroleum Institute, Washington, D.C.

API 682 Second Edition/ISO 21049, Draft, 2001, "Shaft Sealing Systems for Centrifugal and Rotary Pumps," American Petroleum Institute, Washington, D.C.; International Organization for Standardization, Geneva, Switzerland.

Bowden, P. E., 1995, "Cost Effective Emission Control—The European Experience," *Proceedings of the First European Conference on Controlling Fugitive Emissions from Valves, Pumps and Flanges*, Antwerp, Belgium, pp. 185-208.

Bowden, P. E., 1998, "Continuing Development of Mechanical Seals for High Reliability and Very Low Emissions," *Proceedings of the Second European Fugitive Emissions Conference—Controlling Leaks from Valves, Pumps and Flanges*, Dusseldorf, Germany, pp. 95-114.

EPA Method 21, 1990 Clean Air Act, 1990, U.S. Federal Regulation 40 CFR 60, 1990, "Determination of Volatile Organic Compound Leaks," Reference Method 21, Appendix A, United States Environmental Protection Agency, Washington, D.C.

European Sealing Association, 1995, "Meeting Emission Legislation Requirements with Today's Advanced Technology Sealing Systems ESA 005/95," *Proceedings of the First European Conference on Controlling Fugitive Emissions from Valves, Pumps and Flanges*, Antwerp, Belgium, Appendix II.

Farmer, A. M., 1998, "Tackling Fugitive Emissions: A European Perspective," *Proceedings of the Second European Fugitive Emissions Conference—Controlling Leaks from Valves, Pumps and Flanges*, Dusseldorf, Germany, pp. 1-12.

Flitney, R. K. and Nau, B. S., 1986, "A Study of Factors Affecting Mechanical Seal Performance," *Proceedings of the Institution of Mechanical Engineers*, *200*, (107), London, England.

Fone, C. J., 1993, "Effectively Managing Your Pump Seal Emissions," Pump Performance and Reliability Conference, Aberdeen, Scotland.

Fone, C. J., 1995, "The Application of Innovation and Technology to the Containment of Pump Shaft Seal Emissions," *Proceedings of the First European Conference on Controlling Fugitive Emissions from Valves, Pumps and Flanges*, Antwerp, Belgium, pp. 175-184.

Kittleman, T., Pope, M., and Adams, W. V., 1994, "CMA/STLE Pump Seal Mass Emissions Study," *Proceedings of the Eleventh International Pump Users Symposium*, Turbomachinery Laboratory, Texas A&M University, College Station, Texas, pp. 57-62.

Wallace, N. M., David, T. J., and Bowden, P. E., 1999, "Quantifying Reliability Improvements Through Effective Pump Seal and Coupling Management," *Proceedings of the Eighth International Process Plant Reliability Conference*, Houston, Texas.

Young, L. A., Key, W. E., and Grace, R. L., 1996, "Development of a Noncontacting Seal for Gas/Liquid Applications Using Wavy Face Technology," *Proceedings of the Thirteenth International Pump Users Symposium*, Turbomachinery Laboratory, Texas A&M University, College Station, Texas, pp. 39-45.

BIBLIOGRAPHY

Flach, P. M., Sandgren, J. E., and Casucci, D. P., 1993, "Controlling Emissions to Atmosphere Through the Use of a Dry-Sliding Secondary Containment Seal," *Proceedings of the Tenth International Pump Users Symposium*, Turbomachinery Laboratory, Texas A&M University, College Station, Texas, pp. 55-61.

Institution of Mechanical Engineers, 1998, "Mechanical Seal Practice for Improved Performance," London, England/ Mechanical Engineering Publications Ltd.

STLE SP-30, Revised April 1994, "Guidelines for Meeting Emission Regulations for Rotating Machinery with Mechanical Seals," Society of Tribologists and Lubrication Engineers, Park Ridge, Illinois.

ACKNOWLEDGEMENTS

The authors would like to thank the management of Alliance Refining Company, Map Ta Phut, Thailand; Enichem (Petrochemical), Sarroch, Italy; Koch Refinery, Corpus Christi, Texas; Valero Refinery, Paulsboro, New Jersey; and other USA and European refineries for their permission to include data from their plants in this paper.

The authors would also like to thank Alfredo Degli Antoni, John Choma, Skip Kretchsmar, and Pasquale Zeolla of John Crane USA and Italy for their invaluable assistance in collecting data.