POSITIVE DISPLACEMENT RECIPROCATING PUMP FUNDAMENTALS—POWER AND DIRECT ACTING TYPES

by

Herbert H. Tackett, Jr.

Reciprocating Product Manager

James A. Cripe

Senior Reciprocating Product Engineer

Union Pump Company; A Textron Company

Battle Creek, Michigan

and

Gary Dyson

Director of Product Development - Aftermarket

Union Pump, A Textron Company

A Trading Division of David Brown Engineering, Limited

Penistone, Sheffield

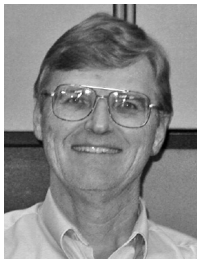

Herbert H. Tackett, Jr., is Reciprocating Product Manager for Union Pump Company, in Battle Creek, Michigan. He has 39 years of experience in the design, application, and maintenance of reciprocating power and direct acting pumps. Prior to Mr. Tackett's current position in Aftermarket Product Development, he served as R&D Engineer, Field Service Engineer, and new equipment order Engineer, in addition to several positions in Reciprocating Pump Sales and Marketing. He has been a member of ASME since 1991.

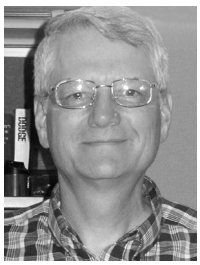

James A. Cripe currently is a Senior Reciprocating Product Engineer assigned to the New Product Development Team for Union Pump Company, in Battle Creek, Michigan. He has more than 30 years of experience in design, application, and manufacture of reciprocating power and direct acting type pumps. Prior to his current position, he served as new equipment order engineer, R&D engineer, special projects Engineer, and Nuclear Engineer.

Mr. Cripe has a B.S. degree (Mechanical Engineer) and has been a member of ASME since 1981.

Gary Dyson is Head of Product Development - Aftermarket, with Union Pump Company, in Battle Creek, Michigan. He held senior positions in Aftermarket Engineering, Hydraulic Design, and New Equipment Design prior to his current leadership role. Dr. Dyson previously held engineering positions with Weir, Mather, and Platt Pumps. He is the author of five papers on modern methods in pump design and is spearheading Union Pump's research into aftermarket solutions on pump emissions reduction.

ABSTRACT

This tutorial is intended to provide an understanding of the fundamental principles of positive displacement reciprocating pumps of both power and direct acting types. Topics include:

- A definition and overview of the pump types—Including the differences between single acting and double acting pumps, how both types work, where they are used, and how they are applied.
- Component options—Covers aspects of valve designs and when they should be used; describes the various stuffing box designs available with specific reference to their function and application, and points out the differences between plungers and pistons and their selection criteria.
- Specification criteria and methodology—What application information is needed by pump suppliers to correctly size and supply appropriate equipment?
- Additional topics—Volumetric and mechanical efficiency, net positive suction head available and required, plus piping systems (suction and discharge) basic principles for reciprocating pumps, which are different from those of centrifugal machines.

INTRODUCTION

Although reciprocating pumps have been around for over 2000 years, they did not gain wide popularity until 1840 when Henry R. Worthington invented the steam pump. These early, simple machines have evolved into the advanced reciprocating products seen today in many industries. During the last 30 years technology improvements have allowed centrifugal and other pump types to become more popular, and reciprocating machines have become somewhat marginalized. That being said, there are still many applications where reciprocating pumps outperform their centrifugal counterparts.

The dominance of these alternative pump types has lead to a knowledge gap for positive displacement machines. However, the positive displacement reciprocating pump is still a vital part of industry and will remain in use for the foreseeable future.

It is important for those who specify, engineer, and use the pumps to have a fundamental knowledge of the principles of these machines, what they can do, and when to use them. This tutorial is intended to provide a reawakening of interest in these important pumps and a forum for education and discussion.

RECIPROCATING PUMPS—DEFINITION AND OVERVIEW

By definition, a reciprocating pump is any machine using reciprocating motion to cause fluid to be moved from one location to another. The most common form of reciprocating pump is the positive displacement type.

This type of pump traps a fixed volume (Figure 1) of fluid and displaces it from suction conditions to discharge conditions by means of check valves placed in series, at least one on the suction side and at least one on the discharge side. These check valves ensure fluid movement is in one direction from pump suction toward the pump discharge. Since a fixed volume of fluid is displaced the rate of flow is directly proportional to speed. Capacity can also be increased by using a pump with multiple plungers or pistons. Pump speed and number of plungers/pistons available is limited by mechanical considerations.

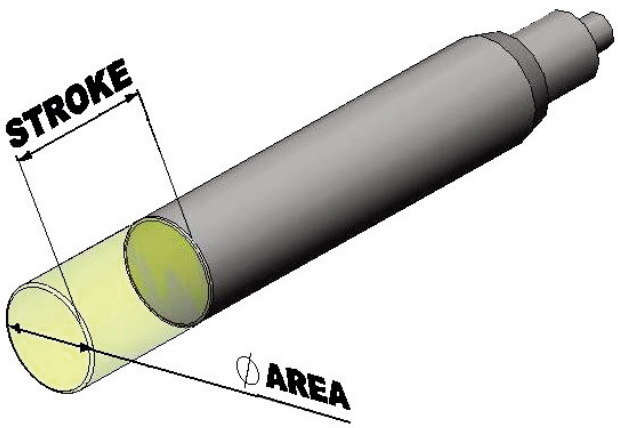

Figure 1. Fixed Displaced Volume.

As a result of the fixed displaced volume per pump revolution and the fact that pressure is independent of pump speed and flow rate, there is no capacity-head curve for these machines as with centrifugal pumps. If a capacity curve were to be drawn, it would simply be a straight line from zero capacity and speed to maximum capacity and speed like shown in Figure 2 at 100 percent (theoretical) volumetric efficiency and another line at actual application volumetric efficiency.

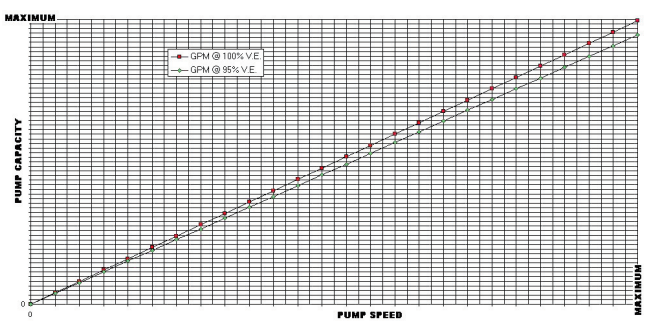

Figure 2. Fixed Displaced Volume Capacity Curve.

Within the sphere of reciprocating pumps there are a number of fundamental configuration differences that warrant explanation. These include the difference between power and direct acting machines, the difference between single and double acting pumps, and the differences between plungers and pistons. This basic configuration knowledge is the foundation of the subject.

American Petroleum Institute standard API-674 (1995) and Hydraulic Institute standards cover many aspects of pump limitations and the features outlined in this tutorial and therefore should be viewed against the background of these two publications.

Power or Direct Acting Machines

The difference between a power pump and a direct acting pump can be illustrated by the following statements:

- A power pump drives a pumping element(s) through the reciprocating motion using either a crank and slider mechanism or camshaft to convert rotary motion and power from an electric motor, engine, or turbine into reciprocating motion and work energy inside the fluid end of the pump.
- A direct acting pump drives pumping element(s) through the reciprocating motion by use of an integral reciprocating engine (similar to a steam engine) to directly transfer engine reciprocating motion and power into work energy at the fluid end pumping element(s). Because of the integral reciprocating engine, this type pump can be driven by steam, air, or gas.
- Both power and direct acting designs can be either "horizontal" or "vertical" in design (Figure 3) and the direction of reciprocating motion is used to define their configuration. Horizontal pumps operate with the reciprocating motion in a horizontal plane parallel to the ground while vertical pumps operate with the reciprocating motion in a vertical plane perpendicular to the ground.

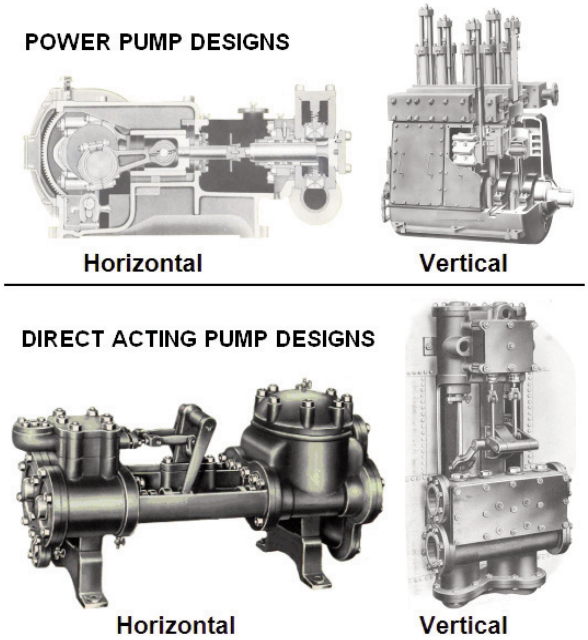

Figure 3. Different Pump Configurations.

Differences Between Single and Double Acting Pumps

When the pump starts on suction stroke, the pumping element begins to withdraw from the pumping chamber (area between suction and discharge valves), and pumping chamber pressure drops below suction manifold pressure. The suction valve then opens allowing flow to enter the pumping chamber, and then closes at the end of the suction stroke. The pumping element begins to re-enter the pumping chamber on its discharge stroke, compressing trapped fluid until pressure in the pumping chamber is above that in the discharge manifold causing the discharge valve to open, allowing a fixed volume of fluid to flow into the discharge manifold. Each time this happens, the pump element is "acting" upon the fluid causing pumping. Therefore, pumps designed to do this once per complete cycle or revolution are single acting, while those designs causing this to happen twice per complete cycle or revolution are double acting.

A single acting pump displaces fluid only in one direction of its stroke as illustrated in Figure 4. A double acting pump displaces fluid in both directions of its stroke shown by Figure 5.

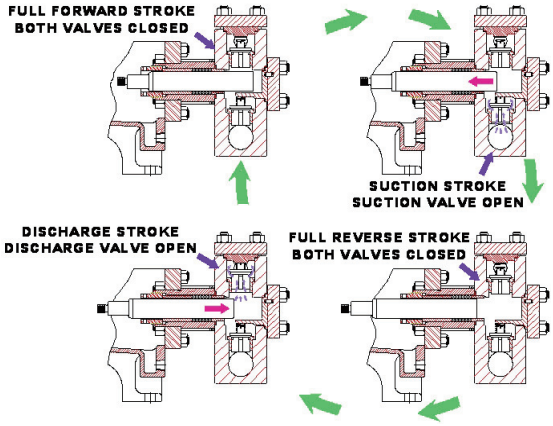

Figure 4. Reciprocating Pump Sequence—Single Acting.

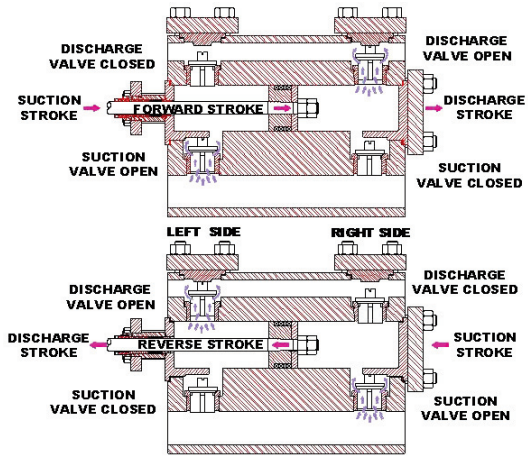

Figure 5. Reciprocating Pump Sequence—Double Acting.

Differences Between Plungers and Pistons

The terms plunger and piston are often used interchangeably, as if they were the same thing. This can lead to confusion. It is important to understand the difference between the two and use the correct term.

A plunger type pumping element, Figure 6, is a smooth rod attached to the slider mechanism/crosshead, which imparts energy into the pumped fluid to cause pressure to be developed within the fluid cylinder. A stationary seal is used around a plunger and the plunger is allowed to move through the seal rings. Plungers are classified as single acting, therefore, when used on a double acting pump two are required. Plungers are normally used when smaller capacity and high pressure are required.

Figure 6. Plunger.

Piston type pumping elements, Figure 7, consist of a cylindrical disc equipped with a seal at the outer diameter (O.D.) attached to a smooth rod (piston rod). The piston imparts energy into the pumped fluid to cause pressure to be developed within the fluid cylinder. The small smooth rod (piston rod) acts to transfer reciprocating motion and power into work energy at the fluid end. The seal at the piston O.D. moves with the piston. This technology is conventionally applied to low pressures and higher flows.

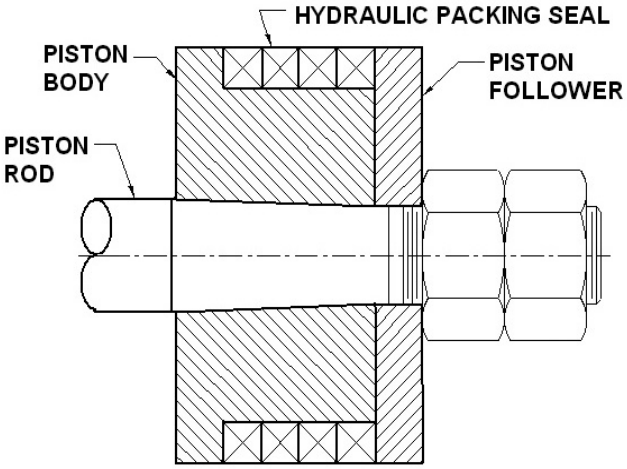

Figure 7. Piston.

COMPONENT OPTIONS

Correct component selection is an important part of ensuring long term reliability. The hydraulic requirements and the constituents of the pump products dictate a number of important design features. Understanding these features and selecting the appropriate design is essential to achieving long mean time between failure (MTBF). While the pump manufacturer is crucial in advising the correct configuration for service, it is prudent to understand the features and benefits of some key components. The following provides a general overview of key fluid end components and where they are best suited for use.

Valve Designs

Valve units (suction and discharge) in essence are check type valves that are opened by differential pressure of the fluid, and allow flow in one direction only. The majority of valve designs are spring-loaded to rapidly return the valve back onto the seating surface and minimize the valve slip (reverse flow through the valve before it seats). The most widely used valve designs are illustrated in Figures 8 through 14.

The standard wing guided valve, Figure 8, has wings extending from the valve head that guide it as it opens and closes. The seating surfaces between the valve and valve seat conventionally are beveled and lapped together to create a tight seal.

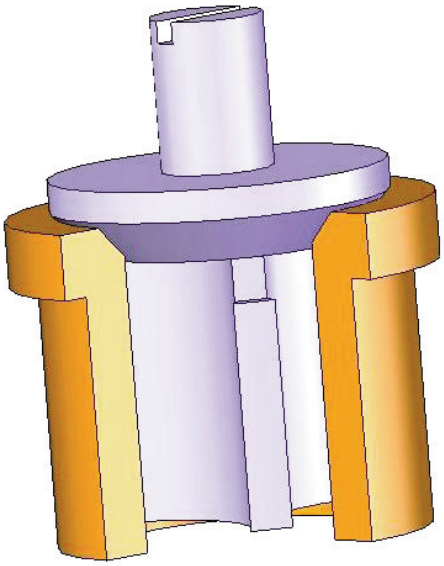

Figure 8. Wing Guided Valve Standard.

This valve is primarily used for higher pressure applications, up to 10,000 psig (690 barg); it is best suited for clean fluids. However, it can tolerate some suspended solids in the pumped fluid. Particulates up to 45 micron and in concentrations not to exceed 1 percent by volume can be accommodated. This valve is well suited for application pump speeds up to API-674 (1995) and Hydraulic Institute speed limitations.

As with the standard wing guided valve, the design in Figure 9, also has wings to guide it as it opens and closes; the seating surfaces between the valve and valve seat are again beveled. However, this design has an elastomer/polymer insert imbedded into the valve head that conforms around trapped solids to create a tight seal when the valve returns to the valve seat. The valve is suitable for fluids containing particulates up to 45 micron and in concentrations not to exceed 3 percent by volume with a 20 to 25 percent pump speed reduction of API-674 (1995) Table 1 limits.

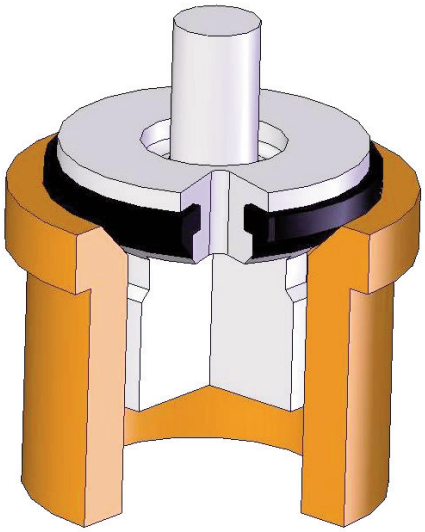

Figure 9. Wing Guided Valve Abrasion Resistant.

The disc valve design, Figure 10, consists of a metal disc guided by a stem (bolt or stud with wear sleeve) at the center as it opens and closes. There are two seating surfaces on the valve and valve seat, one at the disc's outer edge and one toward the center near the guide stem. These surfaces create a tight seal.

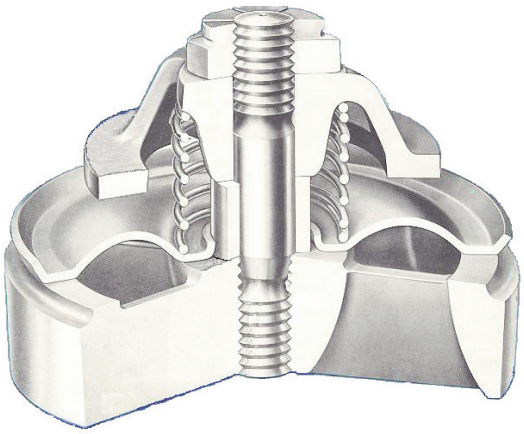

Figure 10. Disc Type Valve Standard Center Guided.

This valve type is primarily used for low to moderate pressure applications, up to 4000 psig (276 barg) and is best suited for clean fluids. The design can tolerate some suspended solids in the pump product, up to 25 micron and in concentrations not to exceed 1 percent by volume. Well suited for application pump speeds up to API-674 (1995) and Hydraulic Institute speed limitations.

The design in Figure 11 uses an elastomer/polymer disc guided by a stem (bolt or stud with wear sleeve) at the center as it opens and closes. There are two seating surfaces on both the valve and valve seat, one at the disc's outer edge and one toward the center near the guide stem, which creates a tight seal.

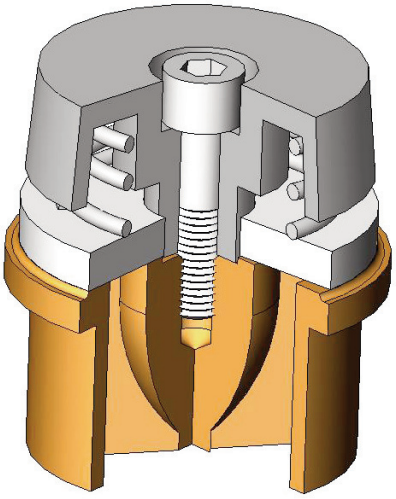

Figure 11. Disc Type Valve Center Guided Abrasion Resistant.

This design is primarily used for low to moderate pressure applications, up to 4000 psig (276 barg) and is best suited for fluids containing solids up to 45 micron and in concentrations not to exceed 3 percent by volume with a 20 to 25 percent pump speed reduction of API-674 (1995) limits.

The double ported disc valve design, Figure 12, is also a metal disc guided by a stem/cage at the center as it opens and closes. There are two seating surfaces on both the valve and valve seat, one at the disc's outer edge and one toward the center near the guide stem to create a tight seal.

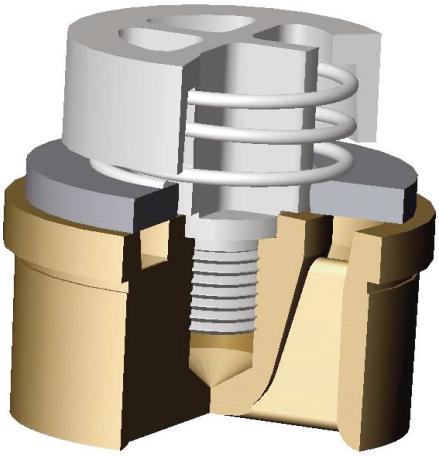

Figure 12. Disc Type Valve Double Ported.

The unique feature of this design is that it allows flow around the outside diameter of the valve, as with all the other single ported valve designs previously presented, and also permits flow through the center of the valve near the guide stem. Hence the name "double ported." This additional flow area at the disc's center permits higher flow rates for the same valve size.

Primarily used for low to moderate pressure applications, up to 3000 psig (207 barg), it is best suited for clean fluids. However, this design can tolerate some suspended solids in the pump product up

to 25 micron and in concentrations not to exceed 1 percent by volume. Suitable for application pump speeds up to API-674 (1995) and Hydraulic Institute speed limitations.

As the name indicates this valve is a ball, Figure 13, which is often guided by an exterior cage as it opens and closes. The seating surface of the valve is spherical while the valve seat is normally beveled. This forms a radial "line contact" between the valve and valve seat to create a tight seal.

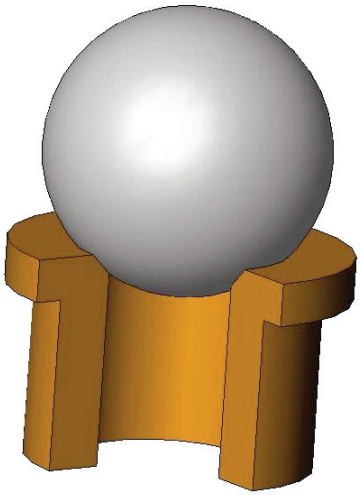

Figure 13. Ball Type Valve.

Largely used in small chemical injection metering pumps, the design is also well suited for slurry and sludge services. This design can tolerate solids up to 250 micron in concentrations not to exceed 40 percent by volume. Use of this design does have a negative aspect; dependant upon stroke length and pump product, pump speed should not exceed 50 to 55 percent of API-674 (1995) limits because of the weight of the ball.

This elastomeric valve type, Figure 14, is best suited for slurry services (drilling mud, bauxite, borax, and coal). The design consists of an elastomer fastened to valve head and has stems extending at both ends to guide it as it opens and closes. The seating surfaces between the valve and valve seat are beveled. The elastomer insert conforms around trapped solids to create a tight seal when the valve returns to the valve seat.

Figure 14. Elastomeric Type Valve.

Design variation using this principle is available for pressures between 750 psig (52 barg) and 5000 psig (345 barg). This design can tolerate solids up to 250 micron in concentrations not to exceed 40 percent by volume. This design does not have the same speed limitation requirement as the ball valve design.

Stuffing Box Designs and Applications

Reciprocating pumps use various methods of packing as their sealing methodology. For packing to be reliable it must always be in contact with a lubricant such as the pumped product or an external flush. Because of this lubricating effect the packing in a reciprocating machine will always leak to some extent. This leakage is essential in ensuring long packing life.

The pump vendor's experience is crucial in determining the most appropriate packing option for the service. This experience should be used to ensure both long packing life and low leakage rates. Choosing the correct stuffing box configuration for the fluid being pumped, its operating conditions, and any Environmental Protection Agency (EPA) or regulatory requirements are essential to both emissions' control and reliability. The most common stuffing box designs available, with their advantages or disadvantages, are described below. This serves as a guide when considering the design options for an application. The pump vendor should assist in finalizing the design configuration.

This simple design, Figure 15, allows flexibility for various seal types. Packing may be square, "V" ring, or nonadjustable designs. The majority of the lubricant migrates into pumped fluid. This configuration can be used on a broad range of fluids. It is particularly suitable for those fluids that exhibit poor lubricity.

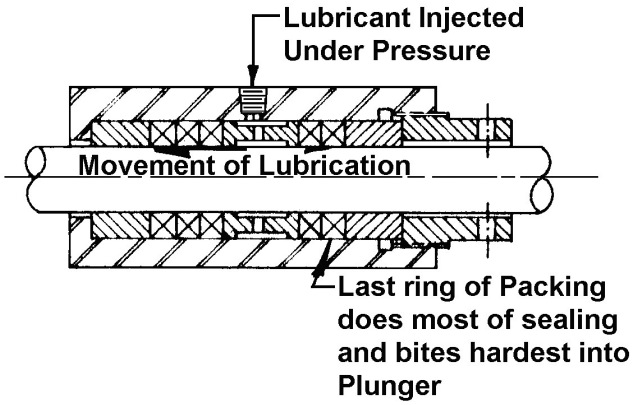

Figure 15. Standard Lubricated Stuffing Box.

Figure 16 illustrates a simple box design that allows flexibility for various seal types and performs more reliably than a standard lubricated stuffing box in the majority of cases. This design allows lubricant to be fed under the last ring of packing. This area is where the lubrication is most needed to resist the sliding wear. With this configuration very little lubricant migrates into the pumped fluid and the design is suitable for the use of low pressure drip type lubricators. Packing may be square, "V" ring, or nonadjustable designs.

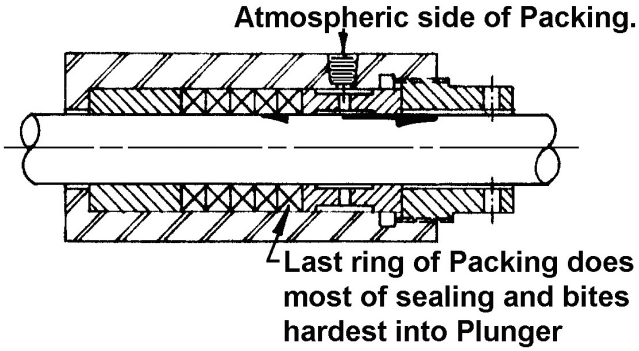

Figure 16. Alternate Lubricated Stuffing Box.

This type of design, Figure 17, has no manual adjustment; it is self-adjusting as the packing wears. The design gives long packing and plunger life and minimal pumped fluid leakage. The design puts lubricant under the last ring of packing as with the previous design and allows use of low pressure drip type lubricators. Packing may be square or "V" ring designs.

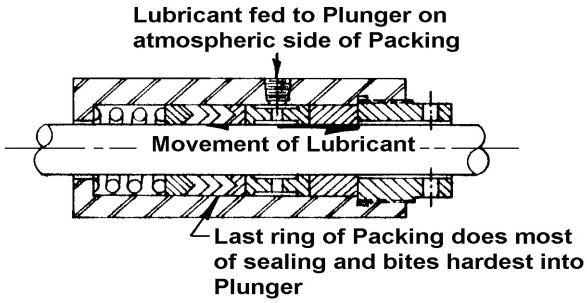

Figure 17. Spring Loaded Lubricated Stuffing Box.

The configuration in Figure 18 illustrates the improper use of a standard stuffing box. This is considered a poor application as the high friction between plungers and packing causes excess heat and as a consequence the machine has short packing and plunger life.

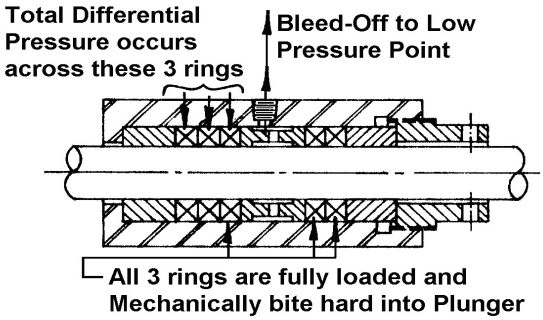

Figure 18. Improper Use of Standard Stuffing Box Used to Bleed Leakage to Low Pressure Point.

Figure 19 is an improvement over a standard stuffing box used to bleed-off leakage to low pressure point although secondary packing is not adjustable to compensate for wear. Less friction and lower temperatures are evident when compared to the standard stuffing box in Figure 18 used to bleed-off pumped fluid leakage to low pressure point. The design has longer packing and plunger life. Packing may be square, "V" ring, or nonadjustable designs.

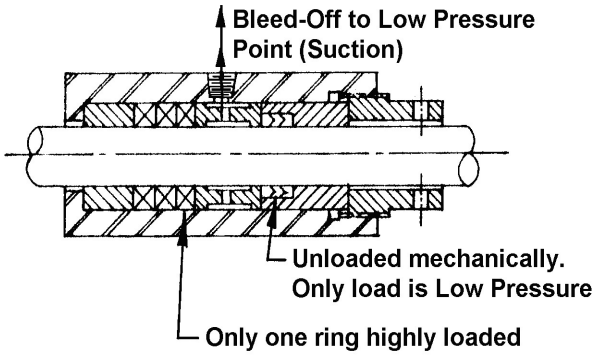

Figure 19. Stuffing Box with Modified Gland Follower to Allow Bleed-Off to Low Pressure Point.

The double gland lubricated stuffing box in Figure 20 is standard for high pressure, critical (toxic and volatile) services. Average packing and plunger life are experienced with negligible pumped fluid leakage to atmosphere.

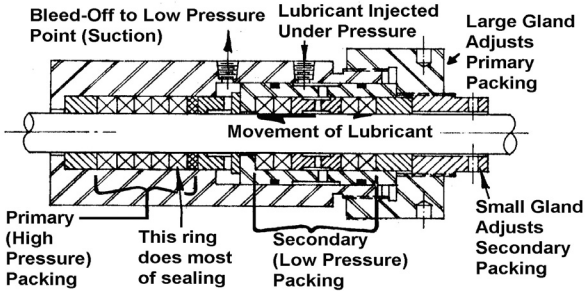

Figure 20. Two or Double Gland Lubricated Stuffing Box.

Pumpage leakage is controlled by bleed-off to low pressure point (suction, flare, etc.) and independent manual adjustment is required for primary and secondary packing glands. Correct adjustment requires a skilled mechanic. Other features include: full size primary and secondary packing, positive packing lubrication, and most of the lubricant migrates toward low pressure bleed-off (suction). Packing may be square or "V" ring designs.

This design, Figure 21, is suitable for cool water and fluids with comparable lubricity. It is important that the total packing length is less than the plunger stroke length to ensure lubrication to the last ring of the packing by the pumpage (self-lubricated). Packing may be square or "V" ring designs. Typical packing style and material usage can be found in Table 1.

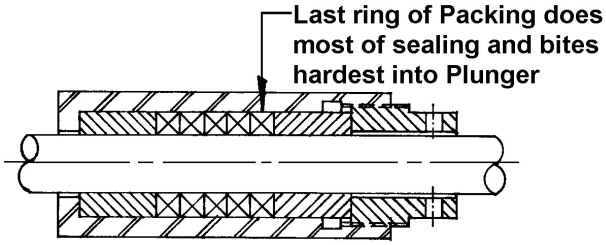

Figure 21. Standard Nonlubricated Stuffing Box.

Table 1. Typical Packing Style and Material Usage.

Fluid Pumped	Pressure (PSIG)	Pumping Temperature (° F)	Typical Packing Style & Material
Water (Fresh)	To 3,000	To 200	A, B,C, D, E, J, K, & L
	To 6,000	To 200	A, B,C, D, E, J, K, & L
	To 6,000	To 350	A, B, C, & H
Oil / Gasoline / Kerosene / Lean Oil	To 3,000	To 350	A, B, C, H, & K
	To 6,000	To 200	A, B,C, D, F, G, J, K, & L
Amine / Glycol	To 2,500	To 350	A, B, C, F, G, & H
	To 3,000	To 350	A, B, C, F, G, & H
	To 6,000	To 350	A, B, C, F, G, & H
Light Hydrocarbons	To 3,000	To 200	A, B,C, D, F, G, J, K, & L
(i.e. Propane, Butane, etc.)	To 6,000	To 150	A, B,C, D, F, G, J, K, & L

Typical Packing Style and Material:

- **A.** Square Ring – braided aramid fiber with lubricant coating
- **B.** Square Ring – braided aramid fiber with PTFE impregnated
- **C.** Square Ring – braided aramid fiber with PTFE inter-braided
- **D.** "V" Ring – Nitrile with cotton duck reinforcement
- **E.** "V" Ring – Nitrile with nylon duck reinforcement
- **F.** "V" Ring – Homogeneous Fluorocarbon elastomer
- **G.** "V" Ring – Homogeneous Fluorocarbon elastomer with aramid fiber reinforcement
- **H.** "V" Ring – HTCR™ / Aflas® / aramid fiber composite
- **I.** "V" Ring – EPDM™ with cotton duck reinforcement and synthetic composite
- **J.** "V" Ring – pure PTFE
- **K.** "V" Ring – PTFE with glass fiber reinforcement
- **L.** "V" Ring – PTFE with Moly filled and glass fiber reinforcement

Notes:

1. The above table is intended as a general guide only to packing selection. Any packing equal to those listed should perform with equal satisfaction. Factors beyond the scope of this guide may necessitate a different style packing and material; consult packing suppliers in such cases.

2. Packing Lubrication is important to long packing life and is recommended whenever possible. However, since lubricant migration into the product being pumped will occur; the lubricant type used is to be determined by the pump user. Select a lubricant with good lubricating properties and that is also product and system compatible. Where oil can be used as the packing lubrication, steam cylinder or a rock drill oils have proven to provide the best lubrication and packing life.

Plunger and Piston Pumping Elements

These components displace the fixed volume of fluid and generate pressure and work with the stuffing box seal. Due consideration should be given to the needs of the fluid being pumped, operating conditions, customer requirements, and any EPA or other regulations for a given application. Pump vendors have extensive experience in this area and should be consulted for assistance in finalizing the appropriate design.

Plunger Type Power and Direct Acting Pump Pumping Elements

These components are smooth rods that move in and out of the fluid cylinder to cause differential pressure and transmit force to develop these pressures inside the fluid end.

Plungers can vary in basic design, as shown in Figure 22, and are made of a base metal compatible/suitable for the service with a hard face coating. Most commonly used coatings include chrome plating, tungsten carbide, nickel/chrome/boride, or one of several grades of ceramic. This coating provides wear resistance to the stuffing box packing seal and extends plunger life.

Figure 22. Plunger Designs.

Piston Type Pumping Elements

These elements consist of a cylindrical disc normally equipped with a seal of some type at the O.D. attached to a small smooth rod (piston rod). Pistons are available in several designs for application differential pressures up to 1500 psig (97 barg), and all rely on the fluid pumped for lubrication to the piston bearing surfaces and seal. Design selection is dependent on the best O.D. seal for the application and ease of maintenance. The body and follower designs shown in Figures 23 through 26 are the most common types because the piston O.D. seal can generally be replaced without having to remove the entire piston assembly from the pump.

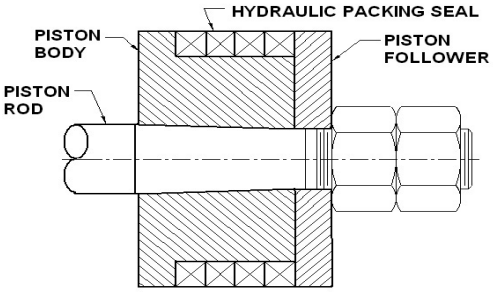

Figure 23. Piston with Hydraulic Packing Seal.

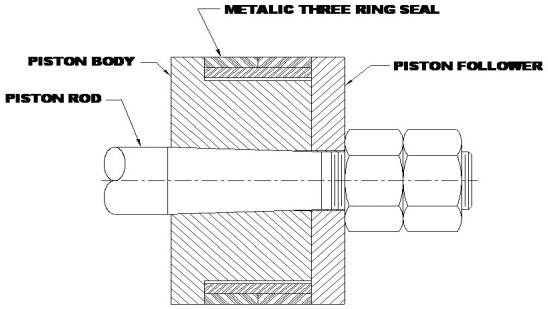

Figure 24. Piston with Metallic Three Ring Seal.

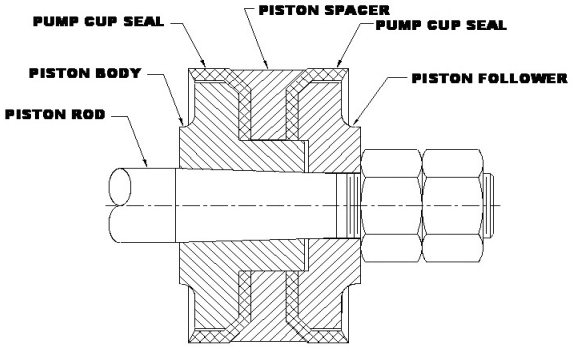

Figure 25. Piston with Pump Cup Seal.

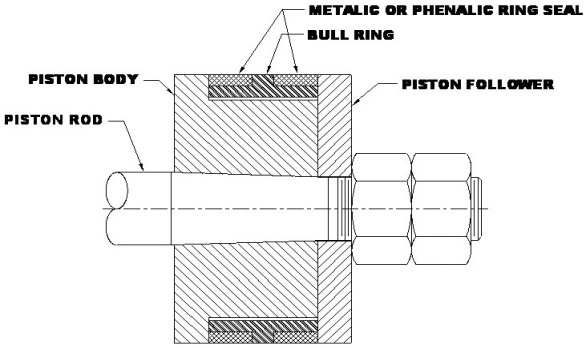

Figure 26. Piston with Bull Ring and Metallic or Phenolic Ring Seal.

Figure 23 piston design has a hydraulic packing seal that is normally an elastomer and woven fabric (cotton, nylon, aramid fiber, etc.) laminated and cut to form rings. The seal is energized by the elastomer used and/or swelling, and also by pumping pressures. This design is well suited for various pumped fluids like lube oil, grease, and slops services, but it is most popularly used on water applications like boiler feed.

The piston design in Figure 24 has a metallic three ring seal, self energized by spring action. It consists of two outer seal rings and an inner expander ring to ensure an O.D. seal is maintained. The most common materials are cast-iron and ni-resist, but a few applications require stainless steels. Long seal life is achieved when used on a metallic liner and pumping a fluid with good lubrication properties.

The Figure 25 pump cup seal piston design has a self energized cup seal that is enhanced by pumping pressures. Normally cup seals are a laminated elastomer/polymer reinforced with fabric (cotton, nylon, aramid fiber, etc.), or can be made of polytetrafluoroethylene (PTFE). This design is well suited for various pumped fluids like lube oil, grease, and slops services, and water applications like boiler feed, just a few examples.

The Figure 26 piston design is the least popular due to the thinner seal cross-section and the additional "bull ring" part to be maintained or replaced. Seal rings are typically made of hard plastic or metal, and require a piston liner material with suitable wear resistance. This design relies solely upon pumping pressures to create a seal, and can be used on pumped fluids from lube oil, grease, slops services, and water applications. When correct piston, seal, and liner materials are used for an application, long seal life can be achieved.

SPECIFICATION CRITERIA

Identifying the service that is ideal for a reciprocating pump is not always a straightforward exercise. Multiple variables must be evaluated and assessed. To make the best choice between pump types it is important to understand how various pump types behave. Positive displacement reciprocating pumps are generally used for the following reasons:

Hydraulics

• Where the hydraulic requirements of a process system make a kinetic or rotary pump unsuitable for the service. Typically, lower capacities (up to about 600 gpm (137 m^3/hr) and higher pressures (up to 20,000 psig (1379 barg).

• Because it is well suited for lower flow rates. Certain combinations of flow rate and pressure make centrifugal pumps inherently less efficient. These applications are around 100 gpm and lower, but especially under 50 gpm. Centrifugals, do well at higher flow rates.

• Positive displacement reciprocating pump net positive suction head required (NPSHR) varies as a function of flow, which is determined by speed. The lower the positive displacement reciprocating pump speed, the lower the NPSHR.

• A positive displacement reciprocating pump can be considered as an alternative to a centrifugal pump operating away from best efficiency point (BEP). The farther away from BEP a centrifugal pump operates, the more viable a positive displacement reciprocating pump solution becomes. This typically happens at low flow conditions, moderate to high pressure conditions, or with elevated viscosity.

Capacity and Pressure Control

• Because of the fixed volume of fluid displacement at a given speed, a more precise capacity can be achieved. A positive displacement reciprocating pump has a constant flow regardless of pressure; pressure and flow are independent of each other. A centrifugal pump has varying flow depending on pressure or head.

• Using a reciprocating pump variable capacity can be achieved by changing the pump speed.

• A positive displacement reciprocating pump can be used if the application has variable pressure conditions. A centrifugal pump will be forced up and down the performance curve thus varying the flow. This can cause process problems. A positive displacement reciprocating pump will give near constant flow making it possible to match pump flow rate to the process requirements. Using a reciprocating pump variable capacity can be achieved by changing the pump speed.

• When a constant flow is required, a positive displacement reciprocating pump is the pump of choice, especially for metering applications.

• Reciprocating pumps can be considered self-priming with the right suction conditions.

Efficiency

• Pump types are very different when considering mechanical efficiency. Pressure changes have little effect on the positive displacement reciprocating pump because pressure and flow are independent of each other. Centrifugal pump characteristic performance curves have interdependency between flow and head.

• Energy efficiency—As a positive displacement reciprocating pump has a high mechanical efficiency, a smaller driver can be used, resulting in lower power/energy consumption versus that of a kinetic or rotary pump.

Special Fluid Requirements

• Because of their lower operating speeds, reciprocating pumps can be used on certain types of fluids containing solids that would quickly erode the internals of a high speed kinetic or rotary pump.

• Another major difference between pump types is the effect viscosity has on the capacity of the pump. A centrifugal pump's flow reduces as the viscosity increases. The positive displacement reciprocating pump increases flow due to the increased volumetric efficiency caused by higher viscosity liquids filling the clearances inside the pump fluid end.

• Pumps have a tendency to shear fluids as speed is increased and the centrifugal is a high speed pump. Lower speed positive displacement reciprocating pumps are better when handling shear sensitive fluids. Shear rates in positive displacement reciprocating pumps vary by design, but they are low shear devices. Pump manufacturers have proprietary information for specific shear rates and applications and can provide some recommendations.

Like all other pump designs, reciprocating positive displacement pumps have their own set of disadvantages, with the most common being the pulsations. The pulsating flow and pressure have specific suction and discharge piping systems requirements to ensure proper pump performance and to protect the piping and other system components.

SPECIFICATION METHODOLOGY

As with all pump types (i.e., centrifugal, rotary, screw, etc.) having correct and complete application information is essential to selecting the most suitable model and size of reciprocating positive displacement pump. The following application information should be provided to the pump vendor to allow the pump model selection and size to be determined.

• What is the fluid to be pumped, i.e., water, gasoline, triethylene glycol (TEG), ammonia, etc.?—This tells the pump vendor the fluid type (Newtonian, thixotropic, colloidal, or dilliant). Many commonly pumped fluids are Newtonian, which some pump vendors have solely establish their pump selection and sizing upon. However, other fluid types have special considerations for pump selection and sizing. The pumped product is used to give a general indication of the pump fluid end design and materials of construction required.

• Is the fluid to be pumped toxic, flammable, or otherwise hazardous to personnel and/or the environment?—This gives a general indication of the pump fluid end design, materials of construction, and stuffing box seal design.

• Required delivered capacity—A reciprocating pump is a positive displacement type, and as such, it does not have a rated flow; it only has a given flow at a given speed. Therefore, a range of flows can be provided simply by varying the pump speed. This can be achieved by an electric motor with a variable frequency drive on power pumps, or by throttling the drive media at the inlet on a direct acting pump.

• Suction pressure—This indicates if a standard pump design can be used, or if the pump size needs to be modified to handle elevated or high suction pressure (equal to or greater than 5 percent of the discharge pressure). Also, tells the pump vendor what pressure category the suction side of the pump must to be rated for.

• Discharge pressure—Used to determine pump plunger/piston size, frame/rod load to achieve best mechanical efficiency, and what fluid end design pressure is required.

• Net positive suction head available (NPSHA)—Aids in determining pump plunger/piston size, pump speed, suction valve type and size, and what other modifications (if possible) may be required to provide a low enough NPSHR.

• Fluid pumping temperatures: normal, minimum, and maximum—Provides indications of what pump fluid end design is required, materials of construction, and stuffing box seal design needed. This also indicates if any pump speed reduction may be required. For pumping temperatures between 350°F (177°C) and 850°F (455°C) pump speed must be reduced and a special fluid end

design is required to make allowance for thermal growth to maintain good alignment between the pumping element and stuffing box seal.

- Any pump speed limits imposed by user specifications—This is needed to determine the pump plunger/piston size, and actual pump speed to comply for the application.
- Fluid specific gravity—This is used in determining the pump plunger/piston size, pump speed, and what modifications may be required for a low enough NPSHR.
- Fluid compressibility factor or bulk modulus at pumping temperatures—This is used to determine the pump volumetric efficiency and in turn pump speed for a given plunger/piston size within a fluid end.
- Fluid vapor pressure at pumping temperatures—Needed to determine pump plunger/piston size, pump speed, and any modifications required for low enough NPSHR.
- Fluid viscosity at pumping temperatures—Allows determination of pump plunger/piston size, pump speed. Starting at 300 SSU (~72 cP) pump speed needs to be reduced as indicated in API-674 (1995) Second Edition Figure 1 and ANSI/HI 6.1-6.5 (1994). Also, helps to determine what or if modifications may be required for low enough NPSHR.
- Does fluid contain any substances or chemicals that will cause corrosion and/or erosion within the pump selected?—This aids in determining the pump fluid end size, pump speed, pump valve type and size, stuffing box seal design (as required for personnel and/or environment protection), and other modifications needed to provide low NPSHR.

As shown in the above, having all of this important information helps determine key aspects of the pump selected and used, in addition to many important pump performance and construction characteristics, including materials of construction, stuffing box seal type, and fluid end design.

RECIPROCATING PUMP EFFICIENCY

While centrifugal pump efficiency is understood in terms of leakage, mechanical, and hydraulic losses, the efficiency of a reciprocating machine is somewhat different. The main constituents of reciprocating pump efficiency are covered below.

Volumetric Efficiency

As shown in the following equation reciprocating pump volumetric efficiency (VE) can be determined with reasonable accuracy (within 1 percent), if all factors are known. Also evident is that VE is dependant upon the fluid compressibility, application pressure, pump C/D ratio (pumping chamber clearance to displacement ratio), and pump valve slip. Therefore, since fluid compressibility, pump C/D ratio, and pump valve slip are known by fluid properties and pump dimensions and characteristics, the actual fixed displaced volume per complete cycle (rpm) is dependant upon pressure and not pump speed.

$$VE = 1 - \left(\left(P\Delta\beta\rho \right) + V_L \right) \qquad \textbf{(1)}$$

where:

P_Δ = Differential pressure (psig) = $P_D - P_S$

β = Compressibility factor of fluid to be pumped at pumping temperature reciprocal (inverse) of fluid *bulk modulus* at pumping temperature

ρ = Ratio of total volume between the suction and discharge valves inside the pumping chamber when the plunger (or piston) is at full forward stroke divided by the plunger (or piston) displacement volume (area × stroke length); also called C/D ratio

V_L = Valve loss or VE loss from fluid slippage back past the pump valves before they can close and seal. This will vary between 1 to 5 percent based upon pump speed and valve design. In general, most pump designs will typically have a 3 percent loss.

Mechanical Efficiency

The mechanical efficiency (ME) of a reciprocating machine, as previously mentioned, is an important consideration. This section outlines the influencing factors with respect to mechanical efficiency and illustrates both power and direct acting pumps.

Power Pumps

As shown in Figure 27, mechanical efficiency varies as a function of frame load, which is simply the pressure applied times the cross-sectional area of the plunger/piston. Percentage of frame load is actual frame load from the application divided by the frame load rating established by the pump vendor. Higher frame loading increases ME. Therefore, the plunger/piston should be sized to provide as high as possible frame load within the pump's frame load rating to achieve the highest possible ME.

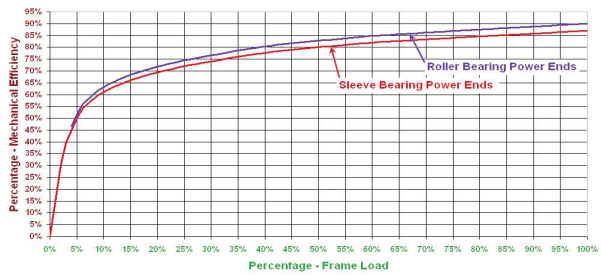

Figure 27. Mechanical Efficiency Versus Frame Load.

Power pumps have mechanical efficiencies up to 87 percent with sleeve type power end bearing pumps, and up to 90 percent for roller type power end bearing pumps. Contributing to the losses are the pump bearings, stuffing box seals, and the pump valves. Additional losses from drive components (i.e., driver, belts, gears, couplings, etc.) should be determined and accounted for in the overall efficiency of the complete pump unit.

Direct Acting Pumps

Mechanical efficiency or pump efficiency is a ratio of force applied to the fluid pumped by the piston/plunger by the force transmitted by the drive piston from the drive media (steam, gas, or air), minus losses due to friction from drive piston drag, stuffing box packing, and pump valves. This ratio is based upon differential pressures at both the pump's drive and fluid ends, as determined using the following equation.

$$ME = \frac{(A_L)(\Delta p_L)}{(A_{DR})(\Delta p_{DR})} \qquad \textbf{(2)}$$

where:

A_L = Cross-sectional area of fluid piston/plunger

Δp_L = Differential pressure across the pump fluid end

A_{DR} = Cross-sectional area of fluid piston/plunger

Δp_{DR} = Differential pressure across the pump drive end

PUMP AND SYSTEM INTERACTION

One significant factor in the successful operation of any pump is an appropriately designed piping system. A poorly designed system can cause problems such as:

- Fluid flashing—Entrained gases in the fluid coming out when pressure in piping or pump falls below fluid vapor pressure
- Cavitation—Free gases in a fluid being forced back into the fluid. These implosions cause severe pressure spikes that pit and damage pump internal parts.

- Piping vibration—Can result from improper piping support, cavitation, or normal reciprocating pump hydraulic pulses
- Noisy operation—Most present when pump is cavitating
- Reduced capacity—Can result from fluid flashing. If it is, this is an indication that the pumping chambers are filing up with gases or vapors.

These factors contribute to reduced pump life, and are a potential hazard to personnel and associated equipment. It is possible to fracture a fluid cylinder and/or piping and damage the pump drive end internals with high pressure surges occurring when fluid is flashing or cavitating.

The following basic piping guidelines represent a combination of Hydraulic Institute recommendations and criteria established by experienced designers of systems containing reciprocating pumps. While pump manufacturers cannot assume responsibility for the piping system into which the pump is installed they can provide valuable guidance that can aid system designs.

Pump Suction Piping System

Piping should be laid out so no high points occur where vapor pockets may form. Vapor pockets reduce the effective flow area of the pipe and consequently make pump priming and operation difficult. Vent any unavoidable high points and provide gauge and drain connections adjacent to pump.

Line Size

Many pump problems result from a suction line that is too small in diameter, or too long. Suction piping should be as follows to provide a smooth transition of fluid flow and result in reduced piping friction losses:

Be short and direct

- Be one to two sizes larger than pump suction connection. Use eccentric type pipe reducers at pump with flat side up to avoid a possible vapor pocket.
- Contain a minimum number of turns. Accomplish necessary turns with long radius elbows or laterals.

Figure 28 contains a chart to aid in the design of suction piping. From this figure determine the optimum suction velocity for the appropriate machine and use this information in Figure 29 to determine the appropriate pipe size. This pipe sizing chart is based on Schedule 40 piping and the values should be adjusted accordingly for heavier schedules.

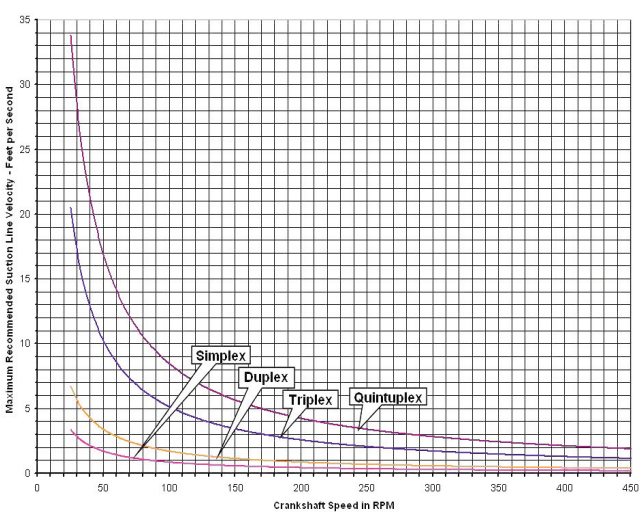

Figure 28. Maximum Recommended Suction Line Velocity for Pump Type.

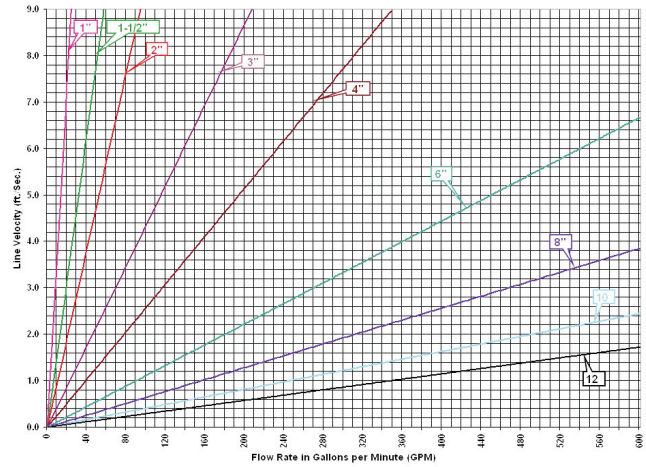

Figure 29. Flow Velocity in Suction Pipe Standard Weight (Schedule 40) Steel Pipe Selection Curve.

The suction line velocity is based on an acceleration head of 0.7 feet per foot of suction line length and the acceleration head equation from the Hydraulic Institute Standard. For discharge line, a velocity not exceeding three times the suction line velocity is considered good practice.

Acceleration Head

After selecting the line size from above, it is necessary to calculate the total acceleration head (H_a) in the suction line. As with centrifugal machines the NPSHA in the system must always exceed pump NPSHR plus piping friction losses, but with reciprocating pumps a further consideration must be made with respect to acceleration head.

Fluid inside the pump is accelerated and decelerated as a result of the reciprocating motion and suction valves opening and closing. This accelerated and decelerated pulsation phenomenon is also manifested within the suction pipe. The energy required to keep the fluid in the suction pipe from falling below vapor pressure is called acceleration head. The key influencing factors of the pump are pump speed, plunger size, valve spring load and spring rate, valve lift, valve passage area, cylinder passage configuration, suction manifold configuration, and power end connecting rod center to center of bearing distance to throw radius ratio. While the key influencing factors for the suction piping are actual suction pipe length, mean flow velocity in suction line, and fluid being pumped. If sufficient energy is not available, problems such as fluid flashing, cavitation, piping vibration, noisy operation, reduced capacity, and reduced pump life can occur. To calculate the H_a required to overcome this phenomenon, use the following empirical equation:

$$H_a = \frac{LVNC}{gk} \qquad \textbf{(3)}$$

where:

H_a = Head in feet (meters) of liquid pumped to produce required acceleration

L = Actual suction pipe length in feet (meters) not equivalent length

V = Mean flow velocity in suction line in feet per second (m/s)

N = Pump speed in rpm

C = Pump constant factor of…

0.200 for simplex double acting
0.200 for duplex single acting
0.400 for simplex single acting
0.115 for duplex double acting
0.066 for triplex single or double acting
0.040 for quintuplex single or double acting

0.028 for septuplex single or double acting
0.022 for septuplex single or double acting

g = Acceleration of gravity = 32.2 feet/sec^2 (9.8 m/s^2)

k = Liquid factor of…
2.5 for highly compressible hydrocarbons
2.0 for most hydrocarbons
1.5 for water, amine, glycol
1.4 for deaerated water

Since this equation is based on ideal conditions of a relatively short, nonelastic suction line, calculated values of H_a should be considered as approximations only.

- *Notes:*

1. As pump speed (N) is increased, mean flow velocity (V) also increases. Therefore, acceleration head (H_a) varies as the square of pump speed.

2. Acceleration head varies directly with actual suction pipe length (L).

3. Acceleration head is a suction piping system factor that must be accounted for by the piping system designer. Pump manufacturers cannot account for this in their pump designs because of the large variety of applications and piping systems pumps are installed in.

4. If acceleration head is ignored or miscalculated, significant pump and piping systems (suction and discharge) may result.

Net Positive Suction Head

Net positive suction head (NPSH) for positive displacement reciprocating pumps is normally expressed in pressure units (psi, kPa, Bar) since a significant portion of pump NPSHR is the pressure requirement needed to push the suction valve from its seat, to overcome friction losses and acceleration head within the fluid cylinder, rather than an energy per unit mass (or head) requirement.

Expressed in pressure units it becomes independent of fluid density. NPSHR pressure units are not expressed as "gauge" (above atmospheric pressure) nor "absolute" (above absolute zero), but a pressure measurement above vapor pressure.

NPSH is divided into two important aspects: what is available (NPSHA) from the suction vessel and piping, and what is required by the pump (NPSHR).

NPSHA

Suction system NPSHA is the pressure provided above fluid vapor pressure to ensure the pump is provided with the NPSH it requires, plus an adequate amount of pressure to overcome piping friction losses and acceleration head generated by the pump. To determine the necessary minimum, total NPSHA must be equal to or greater than pump NPSHR + pipe friction losses + acceleration head. If suction system design cannot achieve this requirement, NPSHA can be increased by one or more of the following remedies.

1. Increase suction pipe diameter to make a larger volume of fluid available adjacent to the pump suction connection and reduce suction piping flow velocity, which will reduce acceleration head and piping friction losses.

2. Shorten suction piping length by providing a more direct route between the pump and suction vessel, relocate the pump closer to the suction vessel, or some combination of both. Again, reducing acceleration head and piping friction losses.

3. Install a suction pulsation dampener or stabilizer adjacent to the pump suction connection. This will reduce the pulsating fluid mass inertia effect by changing the suction piping length portion in the acceleration head equation to approximately 20 to 25 times the suction pipe diameter for bladder types, and to approximately eight to 10 times the suction pipe diameter for larger volume flow through types.

4. Increase available static head by elevating the suction vessel, raising the fluid level in the suction vessel, or possibly lowering the pump location.

5. Cooling the fluid being pumped after it leaves the suction vessel to lower the vapor pressure, now making this pressure reduction a portion of the NPSHA.

NPSHR

Pump NPSHR for a reciprocating machine is not analogous to that of a centrifugal machine. Understanding the difference between the two types of NPSHR is fundamental in ensuring that the pump operates with the correct NPSH margin.

NPSHR for a reciprocating machine is defined as the pressure at which the pump has experienced a loss of no more than a 3 percent reduction in capacity to obtain satisfactory volumetric efficiency at a specific pressure and speed, and relates to pump suction valve losses, pump suction manifold acceleration head, plus pump suction manifold and pumping chamber frictional losses. Conversely for a centrifugal pump NPSHR relates to 3 percent reduction in head at a constant flow.

NPSHR for a reciprocating pump is generally determined by testing on cool water, and a 3 percent loss in capacity is an indication that the pump is starting to or has entered into a cavitational state causing the reduction in capacity.

Figure 30 is a typical NPSHR curve for a 4 ¼ inch stroke single acting triplex power pump, which has a range of plunger sizes available with a given fluid cylinder size. As can be seen, NPSHR varies as a function of plunger size and pump speed within a given fluid cylinder size. The key influencing factors are pump speed, plunger size, valve spring load and spring rate, valve lift, valve passage area, cylinder passage configuration, suction manifold configuration, and power end connecting rod center to center of bearing distance to throw radius ratio.

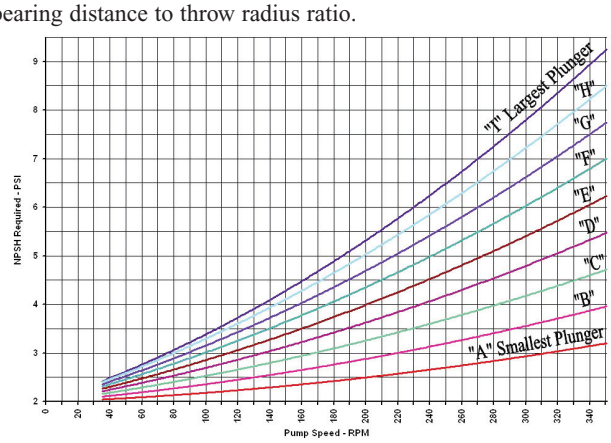

Figure 30. Typical NPSHR Curve.

It has been suggested that some value above the pump manufacturers stated NPSHR be used by system designers to avoid the possibility of operating the pump in a cavitational state. Suggested values for this margin ranges from 103 percent to 125 percent of the NPSHR, and varies based upon the type of fluid being pumped. The lower the fluid specific gravity, the higher this safety factor margin becomes.

Design constraints placed on the system designer can be accommodated by modifying a reciprocating pump design. The following factors can be adjusted to provide a more suitable NPSHR values.

1. Reduce pump speed

a. Increase the plunger or piston size within a given model and stroke length.

b. For a given stroke length, increase the quantity of plungers or pistons, i.e., use a triplex pump instead of a duplex, or a quintuplex instead of a triplex, etc.

c. Change to a larger (longer) stroke length pump.

2. Change the type of suction valve used. Lightweight valves generally require less NPSHR due to the reduction in valve cracking pressure.

3. If reduced pump speed is possible and changing valve type is not, NPSHR could potentially be reduced by using a light (less spring force) suction valve spring, or if pump operating is slow enough, no suction valve spring at all.

Ultimately, using a booster pump to provide ample NPSH should be considered if the system constraints dictate. Such a pump should be installed adjacent to suction supply vessel, have an NPSHR less than total suction system NPSHA, and have a discharge head at least 20 percent greater than positive displacement reciprocating pump NPSHR + pipe friction losses + acceleration head. A suction pulsation dampener or stabilizer adjacent to the positive displacement reciprocating pump suction connection is also appropriate to protect the booster pump from the pulsating fluid mass inertia of the positive displacement reciprocating pump.

Pump Discharge Piping System

Listed below are the fundamental requirements for a discharge piping system.

Piping should not be smaller than pump discharge connection, and should:

- Be as short and direct as possible.
- Be one to two sizes larger than pump discharge connection with increasers used at pump.
- Contain a minimum number of turns. Accomplish any necessary turns with long radius elbows or laterals.
- Have a fluid velocity not exceeding three times maximum suction line fluid velocity shown in Figure 29 for pump crankshaft operating speed.
- Be provided with gauge and drain connections adjacent to pump.

All positive displacement reciprocating pumps deliver fluid and build pressure until action is taken to control and stabilize the pump's work or a failure occurs. To protect pump, piping, and personnel from hazards associated with operating a "positive displacement" pump against a "dead head" a safety relief valve should always be provided between the pump and discharge valve.

The safety relief valve should be sized to pass the entire pump capacity and the cracking pressure should be set at 10 percent over the specified working discharge pressure and have an accumulation pressure not exceeding 110 percent of cracking pressure.

The safety relief valve outlet connection should ideally be piped back to the suction supply vessel. Piping back to the suction pipe can cause discontinuities in the suction pipe flow that can result in poor pump operation and damage. Should it become necessary to pipe the safety relief valve back to the suction piping, the connection into the suction pipe should be a minimum of 10 suction pipe diameters in length back toward the suction supply vessel away from the pump suction connection. This will allow any flow discontinuity created by the relief valve flow into the suction pipe to be smoothed out by time and viscous effect.

A discharge bypass line from pump discharge piping back to the suction supply vessel permits lubrication to reach critical pump and drive parts during startup without subjecting them to high loads and allows all fluid cylinder pumping chambers to become fully primed. A bypass line with a shut-off valve should be installed in discharge piping between pump and check valve back to suction supply source, not into the pump suction line to prevent flow discontinuity.

Install a discharge check valve beyond the bypass connection to protect pump from discharge system pressure during pump idle periods and pump startup.

Discharges piping "dead ends" are to be avoided or provided with dampening device. This type of feature can be responsible for undesirable piping harmonics and can contribute to elevated levels of vibration and noise.

For some services the natural pump pressure or flow fluctuations may not be appropriate. In these cases it is prudent to use a pulsation dampener for the installation. For maximum effectiveness the dampener should be mounted adjacent to the pump fluid cylinder. Recommendations for dampener size and type can be obtained from dampener manufacturers based on details of pump type and size, service conditions, and piping system.

Install flanges or unions as close to the pump as practical to allow for fluid cylinder removal during maintenance.

Shut-off valves are required in both suction and discharge lines to isolate pump when maintenance is required. They should be of full opening design, such as a gate valve.

When connecting two or more pumps to a common suction and/or discharge line exercise care to prevent a mutually reinforcing pressure wave from occurring during operation. This can be achieved by adding the capacities of all pumps that will operate simultaneously to determine line velocities for sizing pipe and calculating the acceleration head. The best way to avoid a mutually reinforcing pressure wave is to install independent suction and discharge lines to each pump.

Figure 31 gives an example of the recommendations outlined in the previous section for an appropriate pump piping system, while Figure 32 provides an example an inappropriate pump piping system configuration.

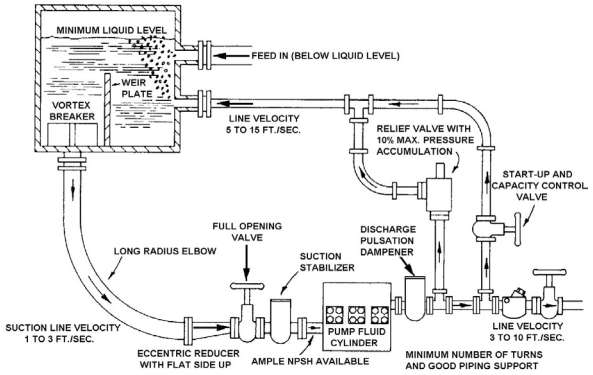

Figure 31. Piping System Appropriate Design.

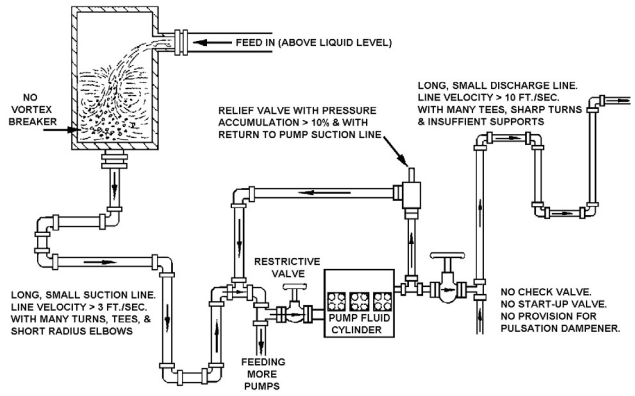

Figure 32. Piping System Inappropriate Design.

APPENDIX A

Troubleshooting pump/system interaction problems can be found in Table A-1.

Table A-1. Troubleshooting Pump/System Interaction Problems.

The following contains commonly occurring situations and their impact on pump performance. The remedy items provided are intended as guidance for pump operators to diagnose simple system problems.

Symptom or Trouble	Remedy
Low Discharge Pressure	
1.) Clogged suction system.	Clean suction filter or strainer. Check suction piping and supply tank for obstruction or partially closed valves
2.) Worn nozzles or orifices.	Oversized or worn nozzles will discharge a capacity, at the required pressure, greater than the pump capacity. This causes the pressure to drop until the nozzle capacity equals the delivered capacity of the pump. Recheck nozzle size and number of nozzles.
3.) Worn seat or stem in pressure regulator or relief valve.	Check overflow or relief valve or pressure regulator, if liquid is escaping - shut pump off and check seat and stem for foreign material or a bad seating surface
4.) Pump not fully primed.	Prime all pumping chambers. For a suction lift, a positive suction pressure may be required to remove trapped air in the fluid cylinder.
5.) Low pump speed.	Correct the speed. If "V" belts are slipping, tighten or replace
6.) Motor improperly wired.	Recheck motor nameplate for proper wiring sequence.
7.) Foreign material under pump valves.	Inspect valve assemblies. Clean, re-lap, or replace components if necessary.
Low Capacity	
1.) Clogged suction system.	Clean suction filter or strainer. Check suction piping and supply tank for obstruction or partially closed valves
2.) Foreign material under pump valves.	Inspect valve assemblies. Clean, re-lap, or replace components if necessary.
3.) Low pump speed.	Correct the speed. If "V" belts are slipping, tighten or replace.
4.) Gas entering fluid cylinder.	Check for air leaks in suction piping. Check pipe joints, packing around valve stems, and instrument connections. Check suction tank for air being drawn in by a "vortex". If air is entering through stuffing box, adjust or replace packing and/or increase lubrication rate.
5.) Insufficient suction pressure.	Increase suction pressure by one or more of the following methods: a.) Reduce the fluid temperature. b.) Reduce suction lift or increase the fluid level in the supply tank. c.) Add booster pump.
6.) Pump not fully primed.	Prime all pumping chambers. For a suction lift, a positive suction pressure may be required to remove trapped air in the fluid cylinder.
Knocking in Pump Drive End - Sound being transmitted from fluid end. ***Knocking or Pounding in Fluid End or Excessive Pulsations***	
1.) Insufficient NPSHA	Increase suction pressure by one or more of the following methods: a.) Reduce the fluid temperature. b.) Reduce suction lift or increase the fluid level in the supply tank. c.) Add booster pump.
2.) Gas entering fluid cylinder.	Check for air leaks in suction piping. Check pipe joints, packing around valve stems, and instrument connections. Check suction tank for air being drawn in by a "vortex". If air is entering through stuffing box, adjust or replace packing and/or increase lubrication rate.
3.) Broken valve spring or foreign material under valve.	Inspect valve assemblies. Clean, re-lap, or replace components if necessary.
4.) Excessive valve lift.	Replace worn parts.
5.) Relief valve or other accessories in discharge piping causing noise.	A rapidly closing valve, solenoid valve, or shutoff valve will produce a water hammer effect. This pressure wave being transmitted back to the pump will cause knocking. A pulsation dampener on the pump side of the valve may be required. A different valve may be required
Excessive Packing Wear	
1.) Abrasives in fluid and/or excessive fluid temperature.	Packing is selected for its suitability to the fluid and the pumping conditions. If conditions have changed or if corrosive or abrasive fluids, or fluids at elevated temperatures are being pumped, special packing may be required
2.) Excessive pump pressure.	Reduce discharge pressure.
3.) Packing Adjustment too tight or too loose	Adjust Stuffing Box Gland
Excessive Temperature in Drive End	
1.) Pump overloaded – discharge pressure too high.	Reduce discharge pressure.
2.) Suction pressure too high.	Reduce suction pressure.
V-Belts Slip	
1.) Discharge pressure too high.	Reduce discharge pressure.
2.) V-Belts worm or damaged	Replace "V"-Belts and properly tension

CONCLUSION

Reciprocating pumps are widely used in many industries. Correctly selecting the equipment with the correct configuration of options is essential to providing and operating reliable machines. The pump and system interaction is also a vital part of reliable operation. The pump cannot be viewed in isolation; how it interacts with the system can also cause poor operating life and premature failures.

REFERENCES

ANSI/HI 6.1-6.5, 1994, "Reciprocating Power Pumps for Nomenclature, Definitions, Application and Operation," American National Standards Institute, Washington, D.C./Hydraulic Institute; Parsippany, New Jersey.

API Standard 674, 1995, "Positive Displacement Pumps—Reciprocating," Second Edition, American Petroleum Institute, Washington, D.C.

BIBLIOGRAPHY

ANSI/HI 6.6, 1994, "Reciprocating Pumps Tests," American National Standards Institute, Washington, D.C./Hydraulic Institute; Parsippany, New Jersey.

ANSI/HI 8.1-8.5, 1994, "Direct Acting Steam Pumps for Nomenclature, Definitions, Application and Operation," American National Standards Institute, Washington, D.C./Hydraulic Institute; Parsippany, New Jersey.

Binder, R. C., 1943, *Fluid Mechanics,* New York, New York: Prentice-Hall, Inc.

Henshaw, T. L., 1987, *Reciprocating Pumps,* New York, New York: Van Nostrand Reinhold Company.

Karassik, I., Messina, J., Cooper, P., and Heald, C., 2001, *Pump Handbook,* Third Edition, New York, New York: McGraw Hill.

Miller, J. E., 1987, *The Reciprocating Pump—Theory, Design, and Use,* New York, New York: John Wiley & Sons, Inc.

Ordway, E. P., 1921, *Union Engineering Handbook—Pumping Machinery, Air Compressors, and Condensers,* First through Eleventh Editions, Battle Creek, Michigan: Union Steam Pump Company.

ACKNOWLEDGEMENTS

Dedicated to those special people who have shared their knowledge, time, and friendship throughout the years: Terry L. Henshaw, P.E.; Harold "Hal" Wilde, P.E.; Reed Nelson, M.E.; Galen C. Peck; Walter J. Noga; and James A. Cripe, M.E.