THE BAFFLING AND TEMPERATURE PREDICTION OF COUPLING ENCLOSURES

by

Donald Carter

Craft Area Supervisor

Marathon Oil Company

Robinson, Illinois

Martin Garvey

Manager of Product Engineering-Engineered Products

Elliott Company

Jeannette, Pennsylvania

and

Joseph P. Corcoran

Turbo Group Team Leader

Kop-Flex, Inc.

Baltimore, Maryland

Don Carter is Craft Area Supervisor with Marathon Oil company. He is responsible for Machine Shop, Welding Shop, and Mobile Equipment in the Robinson, Illinois, refinery. His strong background in rotating and reciprocating equipment started in 1966 with Shell Oil Company in the offshore division where he worked as a Field Equipment Specialist. Responsibilities included performance and maintenance analysis on all compressors in the offshore division. In 1974, he joined PMC Beta Corp., where he served a Performance Analysis Consultant in the U.S., South America, and Mexico. In 1977, he joined Marathon Oil Company and has spent time in the Detroit, Michigan, and Garyville, Louisiana, refineries, before transferring to the Robinson refinery. The responsibilities at Robinson include all facets of the 3400 plus pieces of rotating and reciprocating equipment and to include specification, selection, installation, training, startup, and maintenance, including predictive and preventative programs. He is a member of the Vibration Institute, a Senior member of ISA, and serves in the advisory committee for EPRI magnetic bearings. Mr Carter has authored several papers and written several magazine articles.

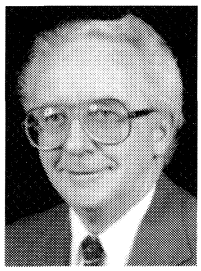

Martin Garvey is the Manager of Project Engineering-Engineered Products for Elliott Company, Jeannette, Pennsylvania. He is responsible for the technical coordination of all orders for new and rerated engineered products. This includes technical interface with customers and vendors, definition of contractual requirements to all operating groups and technical communications including generation and issuance of all drawings and technical documentation. Additionally, he is responsible for auxiliary system design, project drafting, and operating and installation manuals.

Mr. Garvey has worked at Elliott company in Jeannette for the past 21 years. He has a B.S.M.E. degree from Tri-State University (1965), an M.ED. from the Pennsylvania State University (1990), and is a registered Professional Engineer in the State of Pennsylvania.

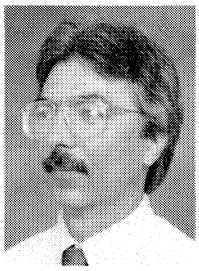

Joseph P. Corcoran is the Turbo Group Team Leader for Kop-Flex, Inc., in Baltimore, Maryland.

At Kop-Flex he is responsible for and engineering and design group which selects, designs, and precesses orders for high performance disc, gear, and diaphragm couplings used mainly in the turbomachinery market. He has eight years' experience in power transmission and custom coupling design and field service at Kop-Flex, and has previous experience as an operations engineer responsible for two 80 ton per day oxygen plants for the City of Baltimore.

Mr. Corcoran has a B.S. degree in Mechanical Engineering from the University of Maryland and is a member of the Vibration Institute. He is also a member of ASME.

ABSTRACT

Increasingly, turbomachinery users are setting upper limits on coupling enclosure temperatures. This is done either to protect personnel, to ensure the proper operating temperature for bearing oil that leaks past seals (or is intentionally drained through the coupling guard), and/or to ensure coupling instrumentation (e.g., torquemeter) temperature limits are not exceeded.

Computer programs and formulas that have previously been developed to predict the temperature rise are not necessarily accurate in some cases. This is because much of the work is based on limited configurations in laboratory experiments. There has also been a lack of direct correlation with "real" situations, as guards are not normally instrumented for temperature measurement.

Work is presented that has been done on actual applications at the Marathon Oil Refinery, and at Elliott Company's facilities, and in other field installations to correlate test data with predicted temperatures using the existing programs.

Moreover, proper guard and coupling designs will be discussed, especially those that prevent the vacuum effect that sucks oil past machinery seals. Finally, actual field problems and solutions are covered.

INTRODUCTION

The need for equipment to operate longer and more reliably is a common thrust for both equipment manufacturers and end users. An area that many have chosen for improved reliability is dry running couplings. Some users are looking to eliminate the sludging, wear, and maintenance problems of oil lubricated couplings. One refinery that is discussed has chosen to move to dry mechanical seals and magnetic bearings in an effort to eliminate oil systems entirely. Thus, the need to use a dry coupling is a necessity.

This increasing usage of high speed dry couplings has, however, produced an awareness of windage inside the coupling enclosure and the phenomena associated with it: heat generation, air turbulence, and oil leakage past seals. These effects of windage have become more evident as many gear couplings are replaced with dry couplings, without any major modifications made to the existing enclosures.

GEAR *VS* DRY

There are a couple of major factors that influence the windage effects of gear *vs* dry couplings. In general, dry couplings are larger in diameter, thereby increasing the amount of heat generated by air shear. Moreover, not only does the oil in gear couplings lubricate, but it also acts as a heat transfer fluid, keeping the guard and coupling cool in most cases.

WINDAGE EFFECTS

For windage effects, a coupling can be modelled as a succession of cylinders with varying diameters. For dry couplings, the ratio of the maximum diameter to minimum diameter is larger than for a corresponding gear coupling. This is especially true for a diaphragm type, but the statement is valid for many disc type couplings. As a result, air turbulence due to this disk effect is increased. Air is centrifuged from the smaller diameter to the larger, like a very inefficient centrifugal compressor, as is shown in Figure 1.

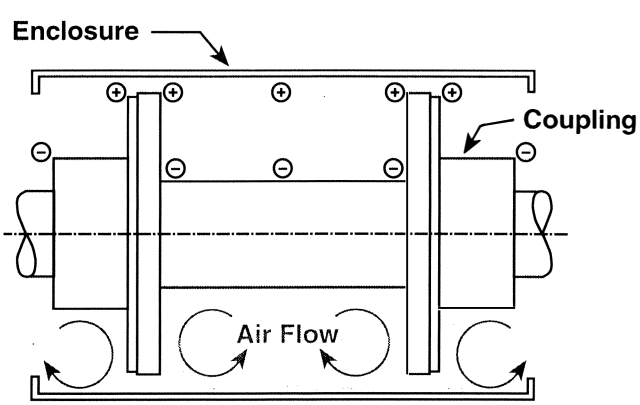

Figure 1. Disk Effect Inside an Enclosure. Note the distribution of positive and negative static pressure due to the disk effect.

Another consequence is the shear effect as shown in Figure 2, where there is a velocity gradient from the long rotating tubular sections of the coupling and the stationary guard. This causes air shear losses in the form of heat buildup and higher temperatures.

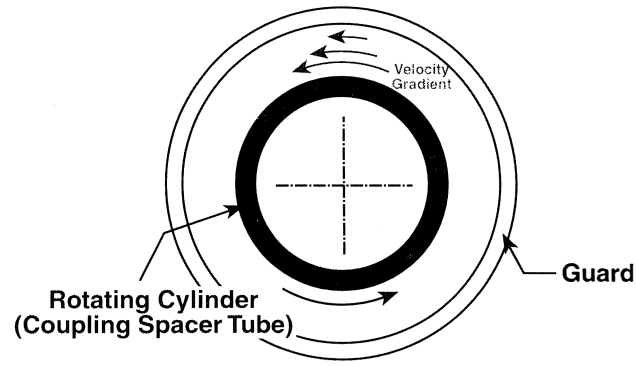

Figure 2. Shear Effect Due to Rotating Coupling Tube.

VACUUM EFFECTS

In addition, in certain dry coupling applications, the air turbulence at the back of the coupling is particularly troublesome. In this area, especially for reduced moment couplings, the disk effect is maximized due to a sudden change in diameter of at least 2:1 (coupling OD *vs* shaft diameter). As a result, the spinning coupling produces a vacuum at the shaft that can "suck" oil past labyrinth seals. The larger coupling diameter has a higher surface speed which "centrifuges" the air away from the shaft, which although spinning at the same rpm, has a smaller surface speed as shown in Figure 3.

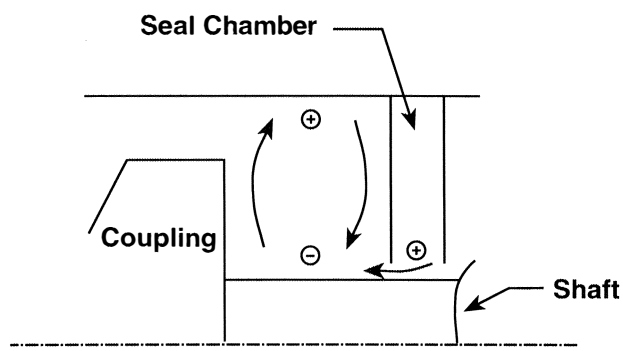

Figure 3. Pressure Distribution Behind a Reduced Moment Coupling.

The increased user awareness of these problems is documented by specific requests to incorporate antiwindage, antivacuum features in the designs of the couplings, enclosures, or seals.

Vacuum Effect Experiments

Several windage experiments performed in Kopflex's research laboratory were dedicated to the study of turbulence and pressure distribution in this critical seal area, which is the back of the coupling in a reduced moment design.

The measurements were performed using a reduced moment disc coupling assembled on a high speed test dynamometer. The pressure values, both static and dynamic components, were determined with Pitot tubes inserted in several key locations of the enclosure chamber (Figures 4, 5, and 6).

The main antiwindage feature investigated, shown in Figure 7, was a baffle placed between the end of the coupling and the seal area of the machine. The presence of this plate virtually eliminated the effects of the vacuum produced by the rotation of the coupling. The distribution of pressure before and after the insertion of the baffle is presented in Figure 8.

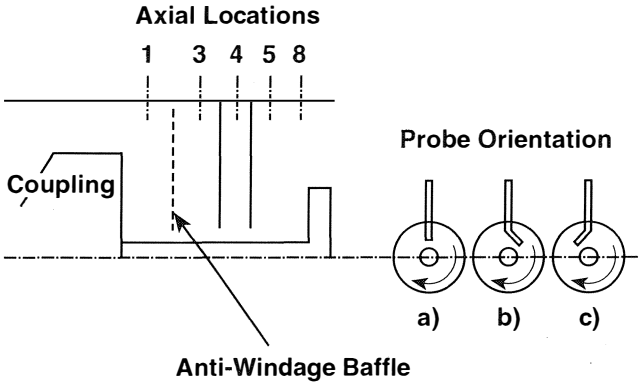

Figure 4. Sketch of Location and Orientation of Pressure Probes.

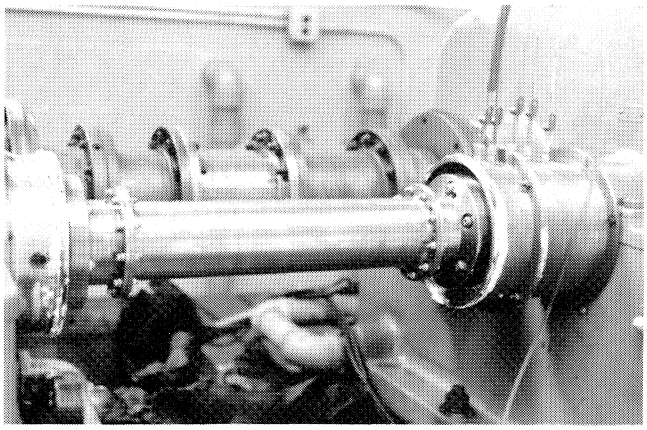

Figure 5. Axial Probe Locations.

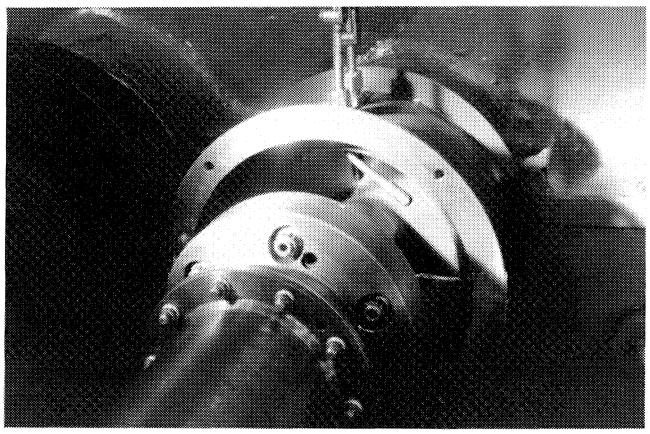

Figure 6. Static and Dynamic Probe Orientation.

The insertion of the baffle creates three zones in the area at the back of the coupling, as shown in Figure 9. The kinetic energy of the air rotating in the turbulent chamber is dissipated in the buffer chamber. As a consequence, the "suction strength" acting upon the seal chamber is considerably reduced. Also, the baffle represents a natural shield, preventing the turbulent air from accessing the area adjacent to the seal.

Another theory to explain the effect of the baffle considers the area (and air velocity) difference between the baffle at the shaft, position 1, and at the machine face, position 2, as shown in Figure 10.

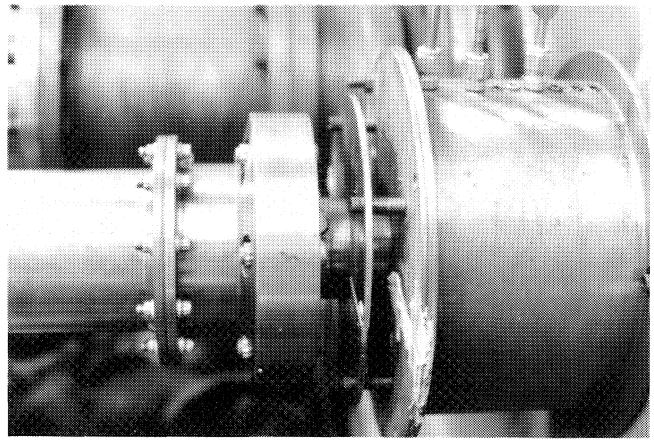

Figure 7. Baffle Plate Between End of Coupling and Face of Machine.

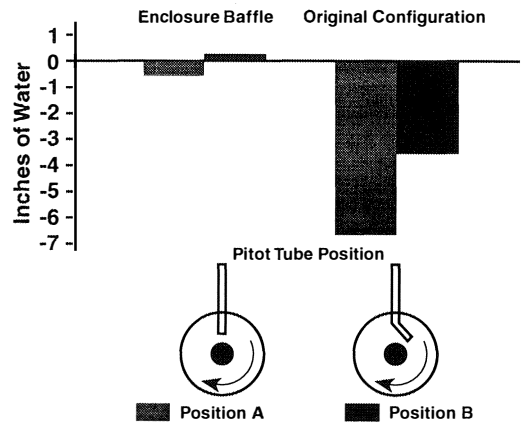

Figure 8. Actual Pressures with and without Enclosure Baffle.

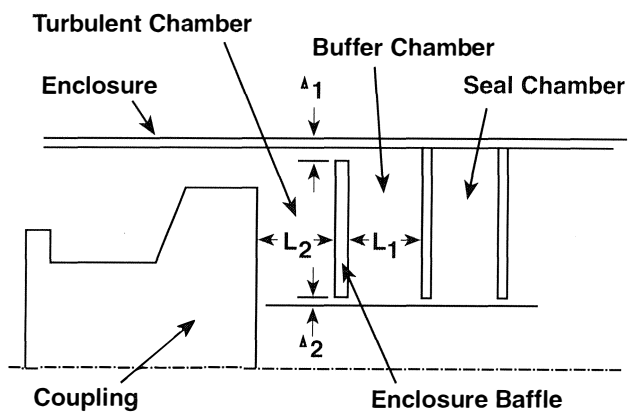

Figure 9. Three Zones Behind the Coupling.

The amount of air that passes through the gap between the baffle and the shaft is related to the pressure difference on either side of the baffle and the gap area. This gap is set so that the area is minimal to reduce air flow.

Also important is the ratio of area at the shaft gap and the area between the baffle and the machine face. The relative velocity of air establishes static pressure levels and, since the area at position 2 is larger than the area at position 1, the air velocity at

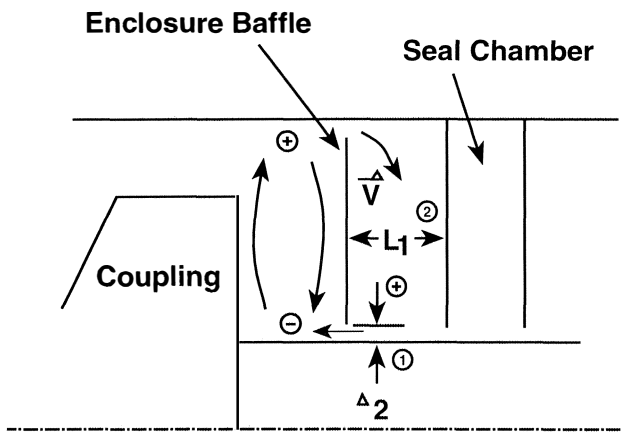

Figure 10. Pressure Distribution With Baffle in Place.

position 2 is lower, and the static pressure is higher. This results in a higher static pressure immediately outside of the machine seal, which minimizes the pressure difference across the seal, and reduces the leakage past the seal.

The successful application of the baffle depends upon establishing two paths for the circulating air stream. A "free" path where the air freely travels out along the coupling face, across the guard, down the baffle, and across the shaft; and a stagnant path where the air travels up the coupling, across the guard, down between the baffle and machine, and across the shaft at the baffle clearance.

The second path reduces the velocity of the air, thereby increasing the static pressure, and reduces the pressure difference across the seal. The first path continues to provide "free" air flow to accommodate the normally large volume of air that the rotating coupling would automatically displace.

For the original tests conducted, the dimensions in the seal area were:

L1 = L2 = 0.75 in
Δ1 = 0.25 in
Δ2 = 0.065 in

It was subsequently found that for the best reduction in vacuum, a ratio between the baffle distance from the housing and the clearance at the shaft of 10:1 (or L1 : Δ1) worked well.

TEMPERATURE PREDICTION

As far as temperature prediction is concerned, there has been little correlation between actual field machinery guard temperatures and predicted results. Coupling enclosures are not normally instrumented for temperature, so checks are not done unless there has been a problem. Even then, many things are "fixed" in an effort to quickly solve the problem and get machinery back on line, so that the main correction is not always evident.

Windage Programs

Two methods of computing coupling and enclosure temperatures in operation were used to predict the temperatures of coupling guards at the Marathon Oil Refinery in Illinois and at Elliott Company's test facilities and other field installations. The first uses modifications of equations presented at the Fourteenth Turbomachinery Symposium [1]. A computer program called "Wind" was written by the coupling manufacturer, using these equations. These are mainly empirical and derived from R&D testing.

A second program called "HP Loss" has also been written using equations from Mancuso [2]. This computational method is based on determining the amount of energy or horsepower that is expended churning the air inside an enclosure and is turned into heat. From this determination, a prediction of guard and coupling temperatures can be made.

"WIND" Program

Since the presentation of Calistrat and Munyon's report [1], some of the equations in "Wind" used for temperature calculations have been revised to reflect acquired data from actual field cases. The following is an updated summary of one of the changed formulas, i.e., the one that is used to predict enclosure temperatures with air cooling. Note that all dimensions are in inches and temperatures in degrees Fahrenheit (Figure 11).

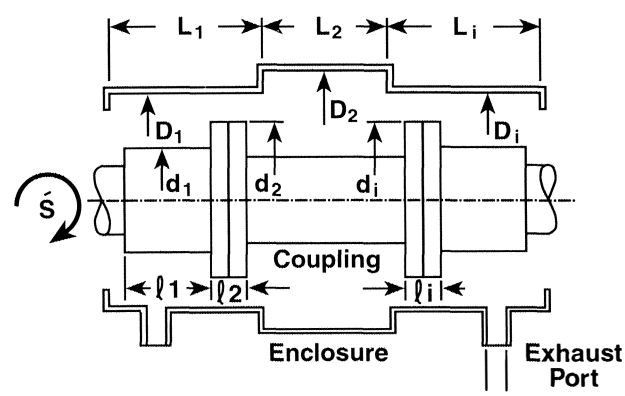

Figure 11. Inputs For "Wind" Temperature Prediction Program.

Coupling Temperature With Air Cooling

For enclosures with air cooling, the coupling temperature is given by the equation:

$$T_c = K_2 \cdot K_3 \cdot K_4 \cdot [\, S/1000 \,]^{(K4e/K1)} + (T_A + T_S)/2 \qquad (1)$$

where,

T_c = coupling temperature

K_1 = air shear factor

= (enclosure mean dia. /max. coupling dia.) $^{0.27}$ (2)

K_2 = area factor

= (coupling surface area factor/ enclosure surface area) (3)

K_3 = coupling circulation factor

= (max. coupling dia./min. coupling dia.) $^{0.2}$ (4)

K_4 = (1/1000) · (enclosure surface area/ exhaust port area) (5)

and the exponent factor K_{4e} is given by the empirical formula:

$$K_{4e} = (1/K_4)^{0.27} + 0.65 \qquad (6)$$

S = application speed (rpm)

T_A = ambient temperature

T_S = shaft temperature

Observations

• The coupling surface area factor (K_{ac}) used to determine K_2 can be evaluated with the formula:

$$K_{ac} = \sum_{i=1}^{N_c} d_i^{2.8} \cdot \ell_i \qquad (7)$$

where,

K_{ac} = coupling surface area factor
N_c = number of coupling cylindrical surfaces
ℓ_i, d_i = length, diameter of cylinder i

• The enclosure surface area is:

$$A_e = \pi \cdot \sum_{i=1}^{N_e} L_i \; D_i \qquad \text{(sq. in.)} \qquad (8)$$

where,

A_e = enclosure surface area
N_e = number of enclosure cylindrical surfaces
L_i, D_i = length, diameter of cylinder i

• The enclosure diameter to be used in Equation (2) is given by:

$$Dem = \left(\sum_{i=1}^{N_e} L_i\right) / \left(\sum_{i=1}^{N_e} (L_i/D_i)\right) \qquad (9)$$

where,

D_{em} = enclosure mean diameter

• The maximum value for K_4 is 0.6 (case of no air flow) while a properly designed enclosure will exhibit an air flow factor K_4 = 0.1 to 0.2. Mathematically, the exponent factor K_{4e} must be situated in the domain 1.8 (for $K_4 < .2$) to 2.2 (for $K_4 = 0.6$).

• The use of the "old" equation, where 2.2 was used instead of K_{4e}, led to temperature predictions which were too high in many cases.

• The exhaust ports area is given by the equation:

$$A_{cp} = (\pi/4) \cdot \sum_{i=1}^{N_p} D_{pI}^2 \qquad \text{(sq. in.)} \qquad (10)$$

where,

A_{cp} = exhaust ports area
N_p = number of exhaust ports
D_{pi} = diameter of exhaust port i

"HP LOSS" Program

This program calculates the temperature rise of a coupling guard due to the rotation of the coupling losing energy to the surrounding air in the form of heat. The algorithm used is known as the horsepower loss method which models the coupling as disks and cylindrical sections with specified diameters and lengths (Figure 12). Note that the temperature of the air inside the guard may tend to be higher than the guard temperature due to frictional heating, but the guard temperature is assumed to be the air temperature to be conservative. Two types of horsepower losses are evaluated in this program.

Disk windage loss accounts for frictional losses in both ends of the guard due to the maximum diameter of the coupling. The equation to find disk windage loss for a coupling is

$$hp_{\text{loss disk}} = rpm^{2.85} \cdot (1/K_1) \cdot (S/D_w)^{1/10} \qquad (11)$$

where D_w and K_1 are found on the horsepower loss constant chart (Table 1) for the proper size of coupling. This equation is to be applied to each end of the coupling if disk loss is present. If S/D_w is greater than 1.0, use $S/D_w = 1.0$.

Table 1. Typical Horsepower Loss Constant Chart.

D_W(in.)	$K_1 \times 10^{10}$
6	2,460
9	372
12	67.6
16	19.3
24	4.76

Cylinder windage loss accounts for friction losses of cylindrical sections of the coupling. The equation to find the amount of horsepower loss for each cylindrical section (Figure 12) is

$$hp_{\text{loss cylinder}} = E \cdot L \cdot C_f \qquad (12)$$

where

$E = rpm^3 \cdot D_C^{3.859} \cdot 5.5 \cdot 10^{-15}$ (13)
D_c = diameter of coupling section (in)
L_C = length of coupling section (in)
C_f = cylinder friction coefficient
$C_f = (128 \cdot B + 2.075) / (B \cdot (rpm) \cdot (D_C)^2) + 0.0015$ (14)
$B = (D_G - D_C) / D_C$ (15)
D_G = diameter of guard section (in)

This is done for each section and all the values of $hp_{\text{loss cylinder}}$ are summed together.

Total windage loss is determined from the addition of the disk hp loss and cylinder hp loss.

$$hp_{\text{loss total}} = hp_{\text{loss disk}} + \Sigma\, hp_{\text{loss cylinder}} \qquad (16)$$

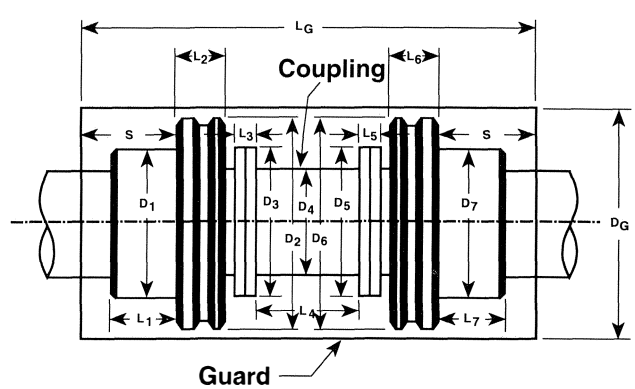

Figure 12. Inputs For "HP Loss" Temperature Prediction Program.

To find the assumed temperature of the guard, take the area of the guard, A_g (ft^2), and divide into the hp loss total, where

$$A_g = (\pi/144) \cdot D_G \cdot (L + D_G/2) \quad (ft^2) \tag{17}$$

From Figure 13 for the total hp / A_g and the correct ambient temperature, T_a (°F), find T_{gl} the assumed temperature of the guard (°F). If $T_{gl} > 175$°F, use the scaling technique below to find the actual hp loss and operating temperature of the guard.

$$hp_{loss\ total} \cdot 590 / (T_{gl} + 560) = hp_{loss\ actual} \tag{18}$$

Again from Figure 13, use $hp_{loss\ actual} / A_g$ and ambient temperature to find the operating temperature of the guard (°F).

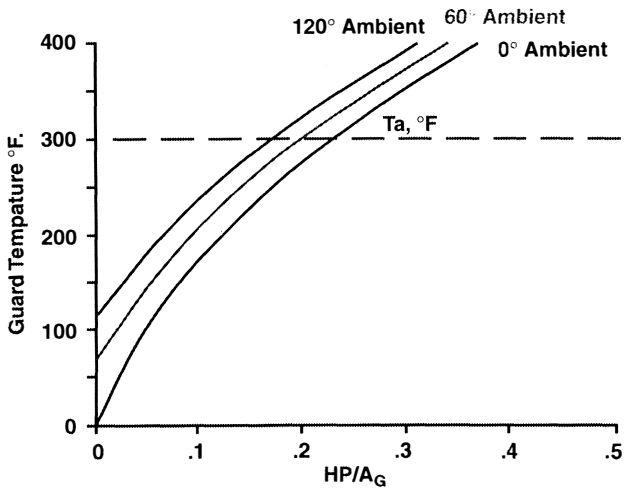

Figure 13. Temperature Rise vs *HP/Ag.*

COUPLING GUARD SURFACE TEMPERATURE MEASUREMENT

Coupling guard surface temperatures were measured on a test stand during string tests of multistage compressors and steam turbines. Measurements were made using a digital thermometer with a type K thermocouple surface probe. This instrument has an accuracy of one percent. Measurements were also taken at the refinery, Cases 4 and 5 below, and at other field installations.

Readings were taken at various locations on the coupling guard surface to determine if the guards exhibited a varying temperature distribution or if hot spots were present (Figure 14). In general, no significant difference in temperature could be observed; the surface temperatures were found to be within plus or minus three percent of the mean temperature. This distribution appears to be random, that is, no one point consistently exhibited higher or lower temperatures.

A major contributor to the increase in temperature of the coupling and guard is heat transfer from the hot air inside the coupling enclosure. This heat is generated from the shearing of the air inside the coupling guard and the air turbulence. Both are the result of friction between the rotating coupling and the air inside the guard [1]. Since the hot gas is in motion with energy imparted to it at various points inside the guard, it is reasonable to conclude that a temperature distribution would be present. It appears that the temperature distribution is a complex function of many variables such as speed, coupling and coupling guard geometry, and direction of rotation. Since this temperature distribution is relatively small and would not have a significant

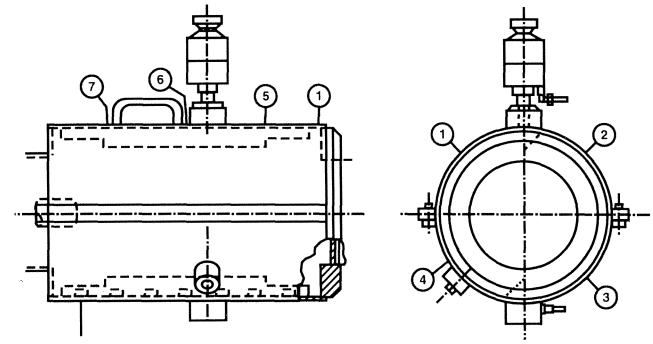

Figure 14. Typical Guard.

effect on the heat transfer from the guard, the analysis of this temperature distribution is not included here.

The measurements were compared with predicted values, using the computer programs mentioned before.

For the "Wind" method, the predicted coupling guard surface temperatures are within approximately plus or minus fifteen percent of the actual measured values. The data are shown in Figure 15 arranged in increasing actual temperature measurements. If the highest and lowest temperatures are not considered, the errors are within plus or minus ten percent.

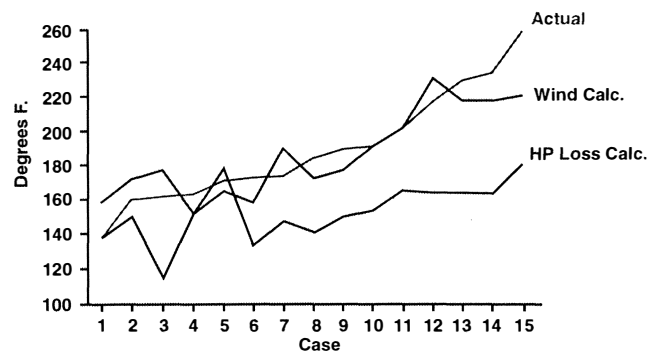

Figure 15. Temperature Comparison Graph.

Most of the coupling guard temperatures were measured during production testing of compressors and turbines while on the test stand. An advantage of obtaining additional data during production testing is the relative low cost associated with the collection of this data. The fact that the main purpose of the test is for reasons other than to obtain coupling guard temperatures is the major disadvantage. Modifications to the test procedure were usually not acceptable. For example, variations in speed to examine velocity effects on guard temperature or retesting to investigate the causes of inconsistent data would usually not be permitted.

Note also that these results are only valid for the limited applications covered here, which in general are ones with more or less properly designed guards, i.e., adequate clearance between the coupling outer diameter and the guard inner diameter, and at least some air cooling from vents and drains. The coupling styles analysed were marine style disc and diaphragm couplings and reduced moment disc couplings. No pattern of percentage error *vs* coupling style could be detected from these results.

In addition, in cases that will be described later, axial baffling had been installed to keep the windage down and also to keep the vacuum effect and subsequent oil suction past seals into the enclosure to a minimum.

For the HP Loss method, the prediction tended to be low by about 20 to 25 percent, although there were some cases that the level of error was much less. This method does not account for porting and venting, and the effect of exposed coupling bolting is not included. Even so, there are cases (not covered herein) where this method can be more accurate, particularly with air and oil tight guards, and with enclosures that have less than an inch or so diametral clearance with the coupling. It may also be the case that there are coupling styles that are more suitable to using this method.

FIELD INSTALLATIONS

In the field cases below windage problems and their solutions are covered. These cases include various drivers, speed ranges, and coupling styles.

Case 1

Diaphragm Coupling

Clark Barrel Eight Stage

Unit Speed—11,200 rpm

Motor/Gear Driver

Hydrogen Recycle Compressor

One of the refinery's early experiences with a "dry" diaphragm coupling was on a small barrel compressor. This machine was being rerated for a new unit. The turbine driver was replaced with a motor/gear, and the compressor internals were replaced. Dry running couplings were also installed.

When the machine was started, an excessive amount of oil leakage was noted streaming out of the coupling guard vent. The vent eventually was piped through the roof of the building into the oily sewer to contain the leakage. The compressor, like most critical unspared equipment, could not be shut down without bringing the unit down. As in most refineries, this request is a death sentence. This was Marathon's early experience with a dry coupling. It was soon discovered that the term "dry" was a very loose term, and that the coupling could be considered, in some categories, a pretty good pump. One problem not encountered at this time was a heat problem, as there was probably enough oil to cool the coupling guard. The machines involved were shut down for good for other reasons before the problem was solved.

Case 2

Diaphragm Coupling

Unit Speed—6,400 to 6,700 rpm

Clark-Split Case 3M-3 and 2M-6

Turbine Driven

Wet Gas Service—Cat Cracker

Refinery

These machines were rerated in 1988 by installing new rotors, diaphragms, dry mechanical seals, and dry couplings. The coupling enclosures were modified to accept the new dry diaphragm couplings. Instead of a vent, the top half of the coupling enclosure was retrofitted with a piece of expanded metal to avoid temperature problems.

The cat cracker was started, and the wet gas compressor was put into operation. The expanded metal solved the temperature problem, but not the oil. A wet suit was needed to take readings on the machine. The oil leakage out of the bearing housing had to be contained.

The major problem was not to contain the oil leak, but who was going to tell the Plant Manager of the need to shut down the cat cracker to repair an oil leak. As there were no volunteers to step forward, a plan was developed to replace the top half of the coupling enclosure with the machine operating. The coupling enclosure flanges were fitted with vertical guide rods so the top half of the enclosure could be removed without damage of contact of the rotating coupling. The top half was replaced with an enclosed piece that would contain the leakage. The temperature of the guard went up after this fix, but was within acceptable limits.

Case 3

Diaphragm Coupling

Unit Speed—5,400 to 6,800 rpm

38MB Barrel Compressor

Turbine Driven

Hydrogen Recycle Service

This unit was commissioned in 1980. It was purchased with a diaphragm coupling. The coupling enclosure that was furnished with the machine was the style that is open on the bottom. Oil leakage had been a problem since the unit had been commissioned. Several attempts had been made to stop the leakage or slow it down, windback labyrinths and air purge had helped some, but had not resolved the problem.

A new coupling enclosure was finally purchased with horizontal (axial) windage baffles, similar to Figure 16, which solved the problem. Oil leakage was reduced to acceptable levels.

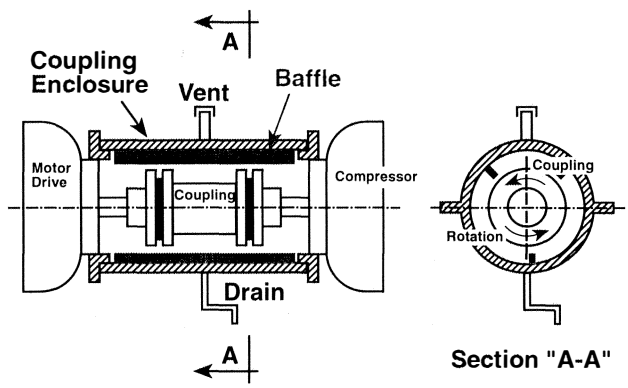

Figure 16. New Enclosure with Axial Baffle.

Case 4

Disc Type Coupling

Unit Speed—10,800 to 12,500 rpm

29M9-8 Compressor

Turbine Driven

Coker Overhead Compressor

This machine was retrofitted in 1992 to dry mechanical seals, magnetic bearings, and a dry coupling. The need for this coupling enclosure to stay dry was now more important than before. The refinery personnel did not want the oil from the gear box to migrate into the magnetic bearing. The coupling enclosure had been replaced during the retrofit as the shaft end space had changed. The machine was started, and again the presence of oil was noted. The horizontal baffles (Figure 16) again solved the problem.

Note that the predicted temperature (Figure 15, Case 4) was accurate only because of the well designed guard. Before the addition of the axial baffles, the temperature level was unacceptable.

Case 5

Disc Type Coupling

Unit Speed—12,600 rpm

20MB-8 Compressor

Motor/Gear Drive

Hydrogen Recycle Compressor

This new compressor was commissioned in 1993 with magnetic bearings, dry seals, and dry couplings. The machine was started and run in on air in the field. The unit construction schedule had not allowed enough time for a complete train test at the factory; this would be the first time that the machine would run with its own coupling enclosure. The air run soon revealed our old friend; oil was again being pulled out of the gear box. Again horizontal baffles proved to be the solution.

Also, the actual temperature before installation of this baffle was over 200°F, due to the coupling churning air and shearing oil at high speeds, even though there was plenty of radial clearance with the coupling—the guard ID was 15 in and the maximum coupling OD was about 7.5 in. One contributor to the problem may have been the unshrouded disc packs which were pumping air at high velocity.

In any event, once this windage was controlled with the baffle, the temperature (Figure 15, Case 5) and the oil suction were reduced to acceptable levels. The temperature prediction was then more accurate because of a better guard/coupling design.

Axial Baffles

The above five cases were problems experienced at Marathon Oil. They all had similar problems—oil leakage and heat. The correction of these problems has been a long process. End users, like all other people that operate major centrifugal equipment, do not have access to the equipment. At first, the problems were not understood and it was the symptons that were being repaired. Windback labyrinths, air purges, close tolerances, nonmetallic materials, and extended vents, etc., were tried. None of these offered much success.

The solution that finally worked in all but the first case was the use of axial baffles in the coupling enclosure. The addition of baffles in the coupling enclosure in the horizontal plane at 45 degree positions in the top half has reduced the temperature and all but eliminated the oil leakage. These baffles, which extend to within 1/2 in of the outer diameter of the couplings, apparently stop the circulation of air circumferentially around the guard. This increases the static pressure and reduces the negative pressure enough to prevent "sucking out" oil from the seals. The reduction of air flow also keeps the temperature down.

Moreover, it has been suspected that huge quantities of oil circulating within the enclosure tends to no longer cool the enclosure but increases the temperature because of the shearing effect in the thick annular circulating ring of oil. If this is true, the axial baffles control the temperature by not allowing these large amounts of oil to be sucked into the enclosure in the first place.

Case 6

Diaphragm Coupling

Unit Speed 4750 to 6400 rpm

46M

Turbine Driven

Charge Gas Compressor—Ethylene

This equipment is installed in a Texas ethylene facility. The diaphragm coupling has an integral torquemeter. The coupling enclosure is a "doghouse" type, enclosed on three sides with an open bottom. Perforated plate was installed on the bottom for personnel protection (Figure 17). From the beginning oil leaked from the shaft end seals, due to the vacuum created by the rotation of the large diameter diaphragm. The leakage was eventually reduced to acceptable levels by the installation of an external baffle, similar to the one in Figure 7, located approximately 1/8 in outboard of the seal. The baffle had 0.020 in clearance with the rotating shaft.

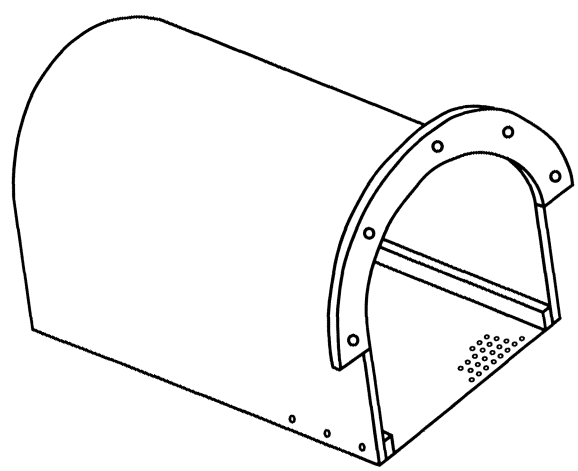

Figure 17. "Doghouse" Coupling Enclosure.

In addition to the oil leak, the coupling temperature during operation was too high for the torquemeter's electronic instrumentation, causing it operate erratically. This problem was overcome by drilling holes throughout the surface of the guard to allow for more air cooling (Figure 18). The installation of an enclosed guard at this point was not feasible due to space limitations. The surface area of the guard would not be sufficient to permit adequate heat transfer to the surroundings to maintain acceptable coupling temperatures.

Case 7

Disc Type Coupling

Unit speed—3960 rpm

Axial Compressor

Hot Gas Expander

Power Recovery Train

This coupling had an integral torquemeter. The unit ran satisfactorily initially. Approximately one year after start up a slight amount of oil mist was observed coming out of the enclosure breather cap. In an attempt to eliminate this nuisance, the operations personnel decided to replace the breather cap with a globe valve. The torquemeter failed due to overheating within one half hour after closing the valve.

CONCLUSION

Before the advent of dry couplings, coupling guards rarely presented an operation problem. The lubricated gear type cou-

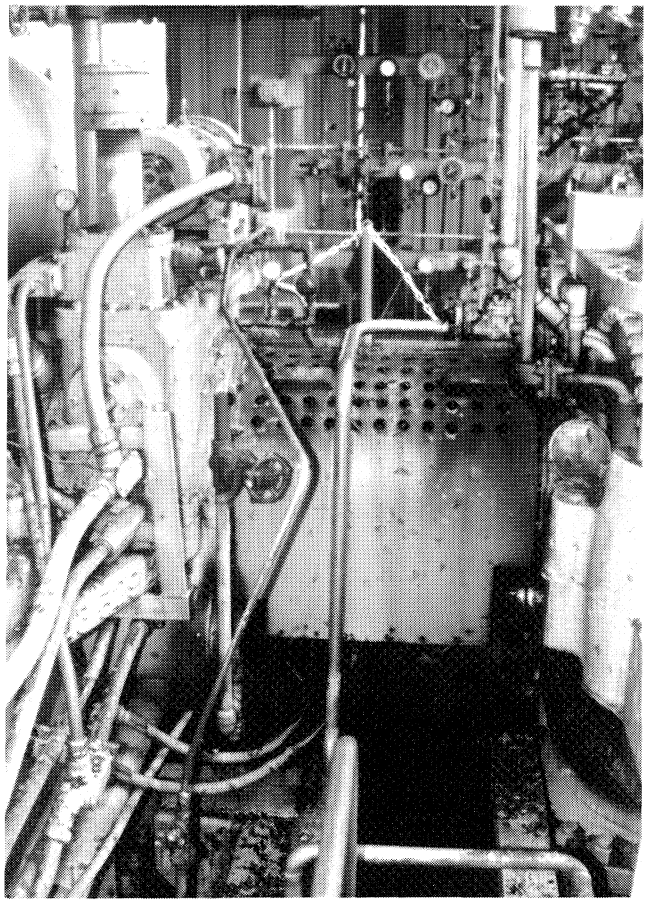

Figure 18. Drilling Holes to Correct Windage Problem.

plings that were in general use were adequately spray lubricated with nozzles located within the guard, and the excess oil sprayed on the couplings tended to keep them cool. Problems associated with the design of the coupling guard became apparent once dry couplings came into acceptance.

Initially, it was believed that in order to allow for proper cooling air circulation the guards should be of the open design. It soon became apparent that the larger diameters of dry couplings tended to act as inefficient centrifugal compressors, and would create subatmospheric pressure levels at the smallest diameters that are right at the shaft end seal. This condition would draw oil out of the bearing housing, which is unacceptable with an open guard. Attempts to eliminate this leakage with baffles at the shaft end seal, reduced the leakage; however, this fix also reduced the air circulation and hot guards sometimes resulted. A totally enclosed guard with vents and drains sometimes eliminated leakage, but hot guards would usually result unless proper thought was given to air circulation within the guard.

Today, designers can draw on the experiences gained during the transition from lubricated to dry couplings, and can assure that coupling guards are properly designed eliminating misting while maintaining reasonable temperatures. With these proper guard and coupling designs, relatively accurate temperature predictions can be made, and subsequent fine tuning of the guard design is possible.

End users thinking about changing existing gear type couplings to dry couplings would be wise to consider the potential problems that could develop and to assure that they are properly addressed.

REFERENCES

1. Calistrat, M. M. and Munyon, R. E., "Design of Coupling Enclosures," *Proceedings of the Fourteenth Turbomachinery Symposium,* The Turbomachinery Laboratory, Texas A&M University, College Station, Texas (1985).
2. Mancuso, J. R., *Couplings and Joints*, New York: Marcel Dekker, Inc. (1986).