44TH TURBOMACHINERY & 31ST PUMP SYMPOSIA
HOUSTON, TEXAS | SEPTEMBER 14 – 17 2015
GEORGE R. BROWN CONVENTION CENTER

ACID GAS REMOVAL OPTIMIZATION WITH ENERGY RECOVERY

Dr. Prem Krish
Chief Technical Consultant
Energy Recovery
San Leandro, CA USA

Andrea Gains-Germain
Director of New Product Development
Energy Recovery
San Leandro, CA, USA

Dr. Max Shirazi
Applications Engineering Director
Energy Recovery
San Leandro, CA, USA

Dr. Prem Krish is the Chief Technology consultant at Energy Recovery Inc. Dr. Krish brings over 25 years of product development experience in a career that spans Sohio, British Petroleum, Carborundum, Dorr-Oliver, Avery Dennison, and Inspectral Systems. In these roles, Dr. Krish conceived, developed, and deployed new products and innovative production processes for a wide range of industries including upstream and downstream petroleum, mining and mineral processing, ceramics manufacturing, and petrochemicals.

Dr. Max Shirazi is the Applications Engineering Director at Energy Recovery. Dr. Shirazi has worked in various sectors of chemical industries including oil and gas, pulp and paper and specialty chemicals as process engineer, engineering manager and project manager. He has led several greenfield and revamp projects in North America, Asia and the Middle East. In his most recent roles, he has managed multi-million dollar projects for Sulzer and Syngenta. After receiving his Bachelor and Master degrees in Chemical Engineering, he obtained his Ph.D. from McGill University in Montreal, Canada. Max is also a registered Project Management Professional (PMP).

Andrea Gains-Germain is the Director of New Product Development at Energy Recovery. Her experience most recently includes bringing a new solar product to market with Cogenra Solar. Ms. Gains-Germain holds a BS and MS in Mechanical Engineering from the University of Arizona and Stanford University respectively. Her academic career also includes serving as a National Science Foundation Graduate Research Fellow at the Hasso Platner Institute of Design at Stanford University.

ABSTRACT

Acid gas removal (AGR) using a high pressure amine solvent in a contactor tower is widely used to sweeten sour gas and render it suitable for commercial distribution. Acid gas removal is also common in other applications such as ammonia production. Single-stage hydraulic turbochargers can reduce energy use in AGR processes. In the revised process, the hydraulic turbocharger essentially replaces the pressure letdown, or level control valve at the contactor exit and the high pressure pump used to bring the solvent to contactor pressure. This significantly reduces operating costs for the acid gas removal unit.

This paper will present a turbocharger based system that optimizes energy use while simultaneously fulfilling the required controls functionality of the LCV. Two turbocharger application configurations that provide the pumping redundancy that is usually required in an acid gas

removal unit (AGRU) are evaluated. A complete description of the turbocharger solution for acid gas removal is presented including control system response analysis to different signals from the plant.

A case study of an installed turbocharger operating in an acid gas removal unit since 2010 in Northeast China is also presented. This installation had a unique bearing failure that is explored along with the resulting solution.

INTRODUCTION

Acid gas removal is a critical process step in natural gas processing and syngas production for ammonia and other uses. The acid gases typically removed are carbon dioxide and hydrogen sulfide. The most common AGR process uses an amine solvent to absorb acid gases in a high pressure contactor column. The pressure is then decreased for acid gas stripping in the regenerator, typically utilizing a pressure letdown valve, wherein the pressure energy is lost. The opportunity exists to use a hydraulic turbocharger to recover the energy wasted in the pressure letdown and transfer it to the low pressure amine exiting the regenerator. This eliminates the need for a high pressure pump – providing energy and maintenance savings. Figure 1 is a simplified process flow diagram (PFD) of a typical acid gas removal unit in a natural gas processing plant.

Figure 1: Simplified Acid Gas Removal Unit

CONFIGURATIONS

The high pressure lean amine circulation (HPLAC) pump is typically installed in a redundant configuration. One configuration for pump redundancy includes one operating pump and another identical pump in parallel on standby. Rapid switchover between pumps is engineered into the plant design and operation. A second redundant configuration is commonly employed in cases of large flows. In this second configuration, three identical pumps are used. Each pump is sized to provide the full pressure boost required for contactor column operation but at only half the flow required. Two of the pumps are in operation at any given time and the third pump is on standby. In the case of pump failure, the standby pump comes online to maintain flow to the contactor.

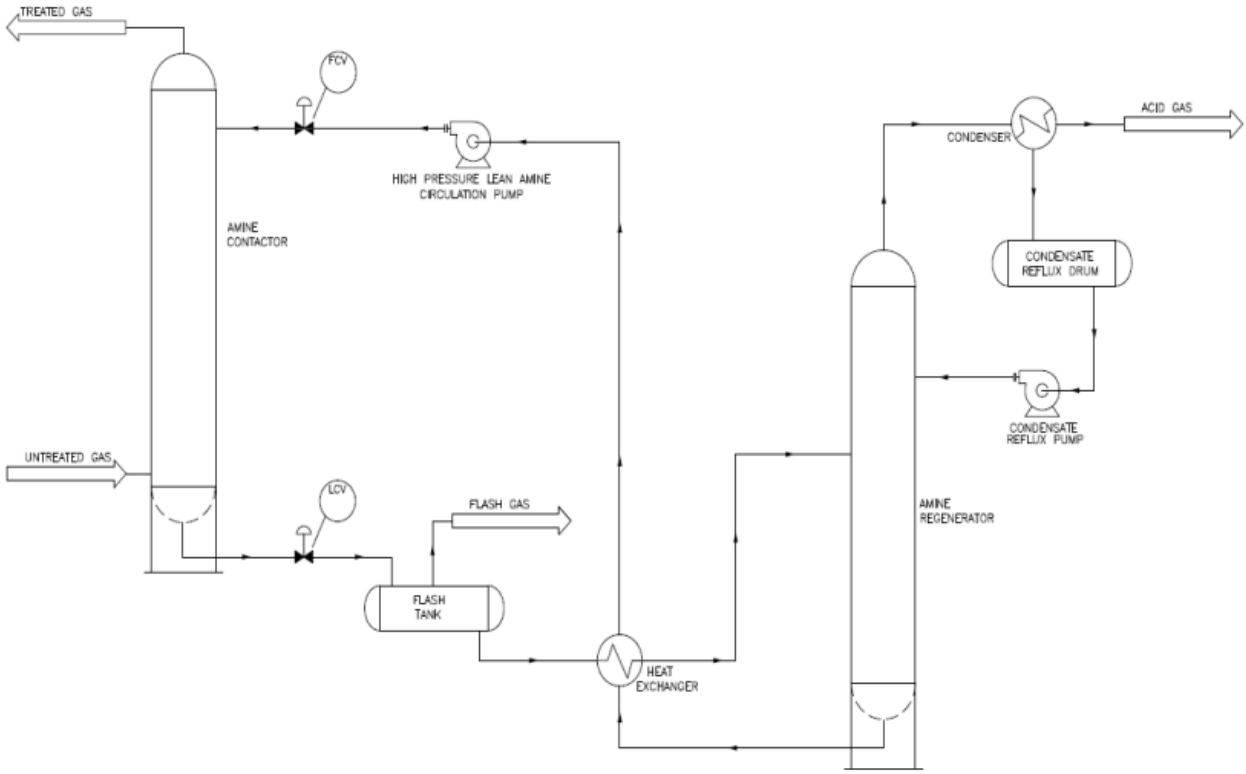

The first configuration of two full sized pumps, one operating and one on standby is referred to here as the 2X100% configuration, and the second configuration of three half sized pumps, two operating and one on standby is referred to here as the 3X50% configuration.

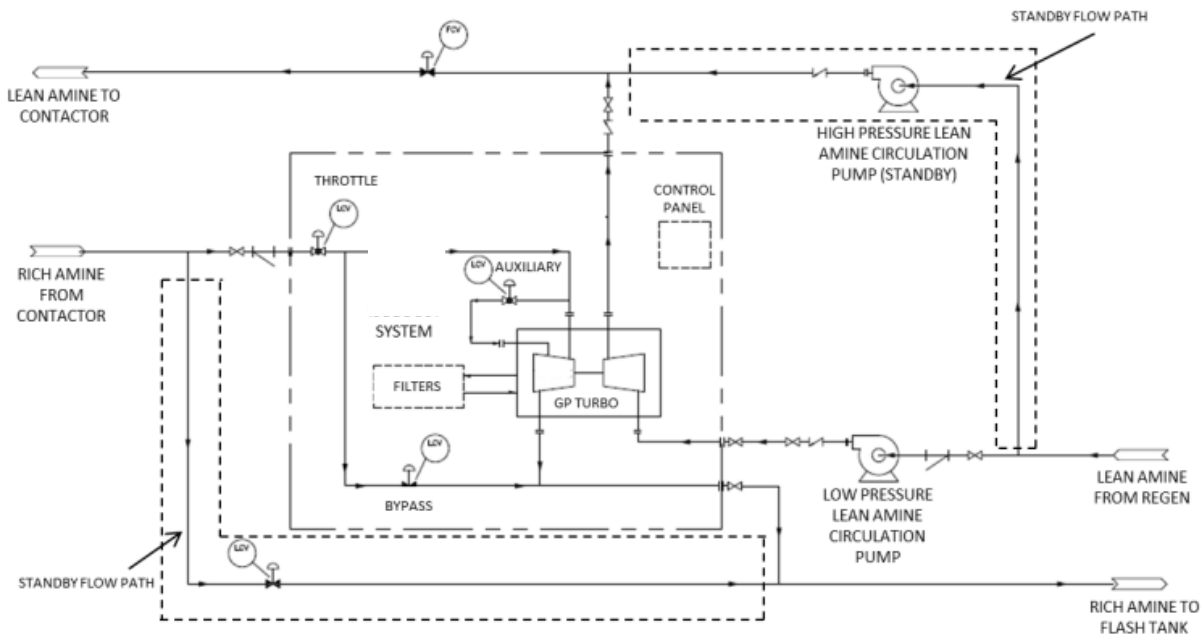

Figure 2: Simplified PFD, 2X100% redundancy

Figure 2 shows a simplified process flow diagram of a hydraulic turbocharger in an AGRU, where a 2X100% redundancy configuration is utilized.

In this configuration, the full effluent from the contactor is directed towards the turbine side of the hydraulic turbocharger and the full flow of the lean amine is pressure boosted by the pump side of the hydraulic turbocharger. Since the liquid to liquid efficiency of the hydraulic turbocharger is about two-thirds, and the turbine and pump side flows are similar, a small boost pump is needed. This boost pump delivers fluid to the pump inlet of the hydraulic turbocharger, providing about one third of the required pressure.

Figure 3 on the following page shows a simplified process flow diagram of a hydraulic turbocharger in an AGRU, where a 3X50% redundancy configuration is utilized.

As in the previously described configuration, the full effluent from the contactor is directed towards the turbine side of the hydraulic turbocharger. Unique to this configuration, approximately half of the lean amine flow is pressure boosted by the pump side of the hydraulic turbocharger. The other half of the lean amine flow is provided the full required head by one HPLAC in parallel with the pump side of the hydraulic turbocharger. This configuration utilizes an asymmetric flow hydraulic turbocharger with the turbine side sized for approximately twice the flow as the pump side. Given that the efficiency of the hydraulic turbocharger is approximately two-thirds, there is more than adequate energy in the turbine side flow to provide the full required pressure boost to the half flow volume on the pump side. In this configuration, there is no boost pump, and the only requirement is that the pump side of the hydraulic turbocharger is provided with adequate suction pressure to operate reliably without suction cavitation.

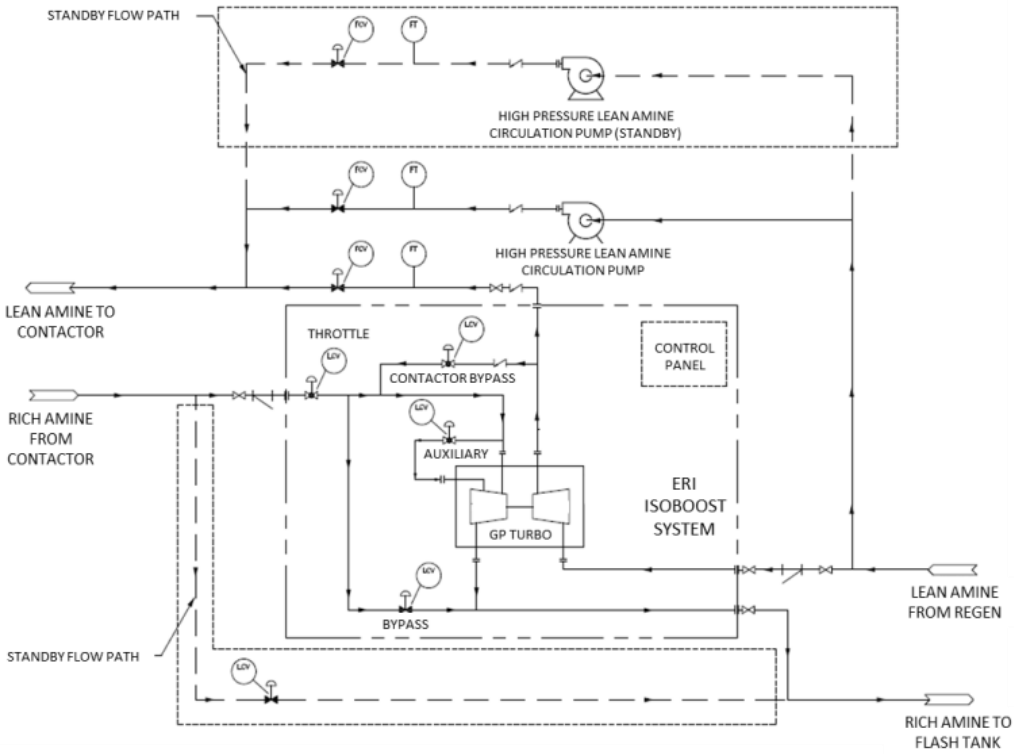

Figure 3: Simplified PFD, 3X50% redundancy

In the conventional application of the 3X50% redundancy configuration, three identical pumps are used in parallel. Two pumps operate and one pump is on standby. Since the pump curves for these are the same, each pump provides exactly the same boost at the same flow. When utilizing dissimilar pumps in this configuration, one has to consider the dissimilarity of the pump curves. In order to overcome any hydraulic issues with competing pump curves, individual flow regulating valves are recommended on each pump leg. This ensures that pressures and flows downstream of the valve remain the same on each leg, regardless of any differentials in upstream pressures. Flow meters provide the signal to drive the regulating valves. The system is designed with sufficient overpressure capacity at the pump discharge to enable the regulating valves to equalize pressures in each leg in the entire range of anticipated plant operating conditions.

Figure 2 and 3 also show three control valves associated with the hydraulic turbocharger: a throttle valve upstream of the turbine inlet, an auxiliary valve controlling flow to the secondary turbine inlet, and a bypass valve enabling flow to bypass the turbine side of the hydraulic turbocharger. The throttle valve is sized to accommodate the entire flow from the contactor and to provide a partial pressure drop. The auxiliary is sized to accommodate ~15% of flow, and the bypass to accommodate ~20 % of the flow. These three valves modulate to control the contactor level in response to the plant contactor level controller output signal.

When the contactor level controller decreases the output signal in response to a falling contactor level within the normal operating range, the auxiliary valve incrementally closes in response, thus reducing flow to the turbine and causing the contactor level to increase. In a similar manner, when the contactor level controller increases the output signal in response to a rising contactor level within the normal operating range, the auxiliary valve incrementally opens in response, thus increasing flow to the turbine and causing the contactor level to fall. The auxiliary valve enables a flow turndown on the turbine of approximately 15%, which is adequate for

contactor level control functionality in normal operating conditions. In these conditions, the auxiliary valve achieves control with the throttle valve fully open and the bypass valve fully closed.

In order to accommodate level control functionality outside normal operating conditions, the throttle and bypass valves operate in low flow and high flow conditions respectively.

HYDRAULIC TURBOCHARGER

The hydraulic turbocharger is a single stage hydraulic turbine connected via a common shaft to a single stage pump, within a single casing. The turbine runner and the pump impeller are on a common shaft, intentionally designed to be very stiff with a low L/D ratio, resulting in extremely low vibration. The hydraulic design of the turbine side and the pump side are custom engineered using CFD programs and design heuristics to best suit the process conditions of the particular application.

Of particular interest is the hydraulic design of the turbine side. Figure 4 is a schematic of the turbine side. Key design features of the turbine side include:

1. A primary turbine nozzle directing incoming flow to the turbine volute
2. An auxiliary nozzle, also directing incoming flow to the turbine volute
3. Replaceable volute inserts that are custom designed for the particular application

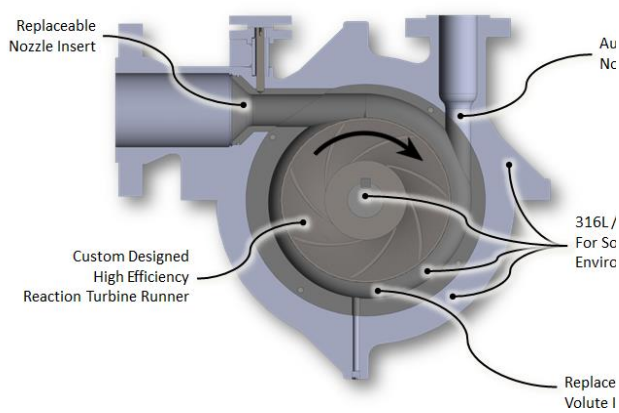

Figure 4: Turbocharger, turbine side cross-section

The flow directed to the auxiliary nozzle is controlled by the auxiliary nozzle valve. The minimum flow to the turbine is with the auxiliary nozzle valve fully closed and the maximum flow to the turbine is with the auxiliary nozzle valve fully open. Modulating the valve between open and closed allows for ~15% flow turndown capability.

The most common alternate turbine design that allows for flow turndown is a variable geometry turbine utilizing guide vanes or wicket gates. The addition of multiple actuated mechanical components, the guide vanes/wicket gates, negatively impacts the reliability of this alternate design and increases manufacturing cost. In contrast, the reliabilities of the auxiliary nozzle and the auxiliary nozzle valve are extremely high. This design enables the functionality of a variable geometry turbine without the associated complexity and potential for failure. Figure 5 is a schematic showing the internals of the hydraulic turbocharger.

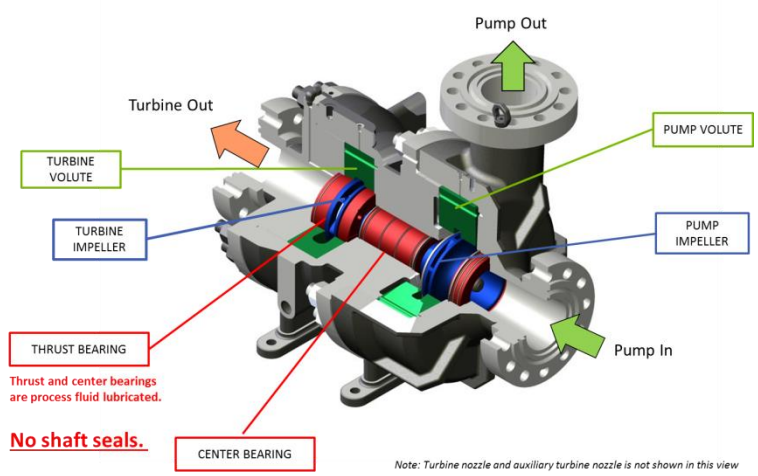

Figure 5: Hydraulic turbocharger, cutaway

High pressure fluid enters the turbine inlet (not shown in Figure 5), driving the turbine and delivering its energy to the common shaft which drives the pump impeller and transfers this energy to the pump side fluid. The common shaft rides on a journal bearing located in the center of the hydraulic turbocharger, and is referred to as the Center Bearing. Since the pump inlet pressure is typically more than the turbine outlet pressure, there is a net axial force towards the turbine side. This axial force is accommodated in the Thrust Bearing shown in Figure 5. The GP Turbo thus has two bearings: The Center Bearing and The Thrust Bearing.

In thousands of installed turbochargers, including one installed in amine service, both

bearings are lubricated by the process fluid. Consequently, there is no external oil lubrication system required for the bearings. In a typical installation, a small quantity of high pressure fluid from the pump discharge (0.5% of the volumetric flow) is used to lubricate the hydrodynamic center bearing and the hydrostatic thrust bearing. The key requirement of the lubricating fluid for the hydraulic turbocharger is that the lubricating fluid be essentially free of particulate matter larger than 10 microns. More than 5000 hydraulic turbochargers have been installed in reverse osmosis desalination facilities worldwide where seawater is the process fluid. Proper operation of the reverse osmosis membranes requires pre-filtration to 10 microns so the process fluid in desalination systems meets the lubrication requirements of the hydraulic turbocharger.

The turbocharger design of the rotating assembly encompassing the pump and turbine side in a single casing and process fluid lubricated bearings allows for energy transfer without mechanical seals. This greatly improves the reliability of the device. As described by Marscher in his paper on avoiding failures with centrifugal pumps for the 19th Annual Pump Symposium, "Seals are considered the Achilles heel of most pumps…" [1]. The reliability prediction equation used to predict failure rates for centrifugal pumps is provided by the *Handbook of Reliability Prediction Procedures for Mechanical Equipment* as [2]:

$$\lambda_P = \lambda_{SE} + \lambda_{SH} + \lambda_{BE} + \lambda_{CA} + \lambda_{FD}$$

Detailed methodology for determination of each of these component failure rates for specific equipment and operating parameters is provided in the handbook and correct determination is critical for an accurate result. However, it is informative to review the base failure rates, before modification, to understand the relative impact of the components on failure rate. The base failure rates for centrifugal pumps are given in Table 1.

Table 1: Pump Failure Rates [2]

Pump Component	Base Failure Rate	Assumptions
Mechanical Seals	$\lambda_{SE,B}$ = 22.8	
Shaft	$\lambda_{SH,B}$ = 0.01	$\sigma_{T,ult}$ > 200 kpsi
Bearings	$\lambda_{BE,B}$= 0.00004	L10=25,000 hours
Casing	$\lambda_{CA,B}$ = 0.01	
Fluid Driver	$\lambda_{FD,B}$ = 0.2	

The elimination of seals and external bearing lubrication systems both contribute to the high mean time to failure (MTTF) of the hydraulic turbocharger. MTTF estimation is arrived at by two separate means, one being the evaluation of hydraulic turbocharger performance in desalination where these devices have been in use for 20+ years and second being the utilization of the OREDA, Offshore Reliability Engineering Database [3], and removing failures from seals, gaskets, and external couplings. These two approaches are described below:

a) Turbochargers in desalination: A study involving a large installed base (359 units) of turbochargers in seawater reverse osmosis desalination service over a period of 17 years (1996-2013) concluded these units have a typical MTTF of greater than 10 years even though the application is relatively challenging due to the corrosive nature of the high chloride process fluid, poorly constructed plants, and relatively unskilled operators as compared to typical oil and gas installations. Failures observed were mostly associated with debris in the process fluid and chloride crevice corrosion.
b) OREDA data [3]: On removing failures caused by seals, gaskets, and external couplings from the OREDA data, we find that MTTF extends from 2.9 years to 8.9 years. The qualification of failure types and related components is based on a root cause analysis of the OREDA pump database described above. This result correlates well with the 10 year MTTF of hydraulic turbochargers in desalination. A hydraulic turbocharger will share similar failure modes as related to impellers, changes in operating conditions, and potentially bearings in a pump. The process fluid lubricated internal bearings in a turbocharger have a lower typical failure rate than conventional bearings in centrifugal pumps as they do not require an external bearing support system, such as oil mist lubrication, but are still a potential failure mode. Since hydraulic turbocharger design does not include an external shaft,

shaft seals, gaskets and couplings, failure modes associated with these components do not apply.

Both the 10.0 (approach a) or 8.9 (approach b, mean times to failure are substantially longer than centrifugal pumps which experience an average 2.9 year MTTF [3].

Particulate specifications for the process fluid in AGR systems are less stringent than in desalination since there are no membranes involved in the AGR process. Instead, AGR processes utilize gas/liquid or liquid/liquid contacting towers which can tolerate much higher levels of particulate matter. Best practice in AGR plants would have full flow process fluid filtration and maintain a high quality process fluid to ensure trouble free operation of pumps, heat exchangers, absorption and regeneration columns and all other process equipment. However, there is a wide range in plant operations, and the quality of the process fluid varies significantly. Figure 6 shows an example of amine process fluid samples from 3 parallel processing trains within the same natural gas processing facility. While the right two samples show a relatively clean amine process fluid, the left most sample is significantly laden with particulate matter. Figure 7 provides an up close view of this sample, with a significant amount of visible particulate matter in the bottom.

Figure 6: Amine process fluid samples from different processing trains within the same natural gas processing facility

Figure 7: Close-up of the leftmost sample in Figure 6

In such AGR processes, there are a variety of sources of particulate material, which have differing levels of potential impact on the integrity of the thrust and center bearings. This results from the differences in the hardness of the particulate matter in relation to the hardness of the bearing materials. Particulate material originating from pipe scale and pipe corrosion products are generally softer and less abrasive than mineralogical particulates originating from the natural gas well.

In applying the hydraulic turbocharger to AGR processes, it is recognized that some form of protection should be engineered into the system to protect the bearings from unwanted particulate matter. To this end, the high pressure fluid taken from the pump discharge is filtered to remove particulate matter and then fed to the turbocharger's bearings. This filtration system is designed as two filters in parallel, one in operation and the other on standby. Pressure differential is measured across the operating filter and when this reaches a threshold value, an operator alert is triggered to switch and replace filters. In well operated plants with full flow process fluid filtration, and adequate gas pretreatment, the on-skid lubrication fluid filters require replacement every one to six months, which is well within plant operational and maintenance periods

NORTHEAST CHINA CASE STUDY

In 2012, two 1300 gallon per minute (gpm) turbocharger s were installed in a gas processing plant using Methyl Diethanolamine (MDEA) as the process solvent. The plant has two parallel acid gas removal units and processes approximately 40 MMCFD (million cubic feet) per day. A turbocharger was installed on each acid gas removal unit. Under typical operating conditions, each turbocharger operates at 1300 gpm providing boost across the pump side from 370 psi to 950 psi. This represents 328 kW of pumping power provided by the hydraulic turbochargers on each train.

On starting up the plant, the process fluid lubrication filter (filtering to 10 micron) was clogged within a few minutes, forcing a shutdown of the turbocharger. A significant amount of metal and inorganic debris was found in the turbocharger as well as in the filtration media. It was hypothesized that incomplete flushing of the process piping was the root cause of this debris. On restarting the unit, it was found that the fluid lubrication filters were repeatedly fouling very quickly. Due to loss of lubrication flow, debris from the process fluid had made its way to the bearing surfaces and had caused damage to the bearings and the rotating assembly.

The debris was collected and evaluated for chemical nature and particle size distribution. It was found that the debris was mineralogical in nature with particle size in the 50 to 500 micron range. This correlated well with the type and extent of damage that was observed on the bearing surfaces (Figures 8 and 9). Discussions with plant personnel revealed that the inlet gas pretreatment operation was not being efficiently performed, and that the inlet gas was bringing well debris into the amine contactor, thus contaminating the process fluid. Plant filtration systems for the process fluid had also been taken offline due to extremely frequent fouling. Due to specific circumstances at this particular plant, the process fluid was highly contaminated and it was not possible for the given bearing lubrication system to operate consistently. An alternate system for bearing lubrication was therefore sought so that the repaired turbocharger would be able to operate without risk to bearing integrity.

Figure 8: Damaged thrust face of thrust bearing

Figure 9: Damaged thrust face of turbine runner

In this AGR process, the regeneration of the process solvent (MDEA) is conducted at high temperature to enable effective acid gas stripping. The acid gas exiting the regenerator carries with it the saturation level of water vapor and some light organics that are volatilized from the MDEA solvent. This water and light organics are cooled in a water cooled condenser. This condensate is collected in the condensate reflux drum and returned to the regenerator circuit. In many cases, make-up water is also added to the condensate reflux drum. The fluid from the condensate reflux drum is ideally suited for bearing lubrication of the hydraulic turbocharger, since it is particulate free. The opportunity exists to use this reflux condensate and make-up water to lubricate the hydraulic turbocharger in those cases where the process fluid is highly particulate laden. Figure 10 on shows a PFD utilizing this concept.

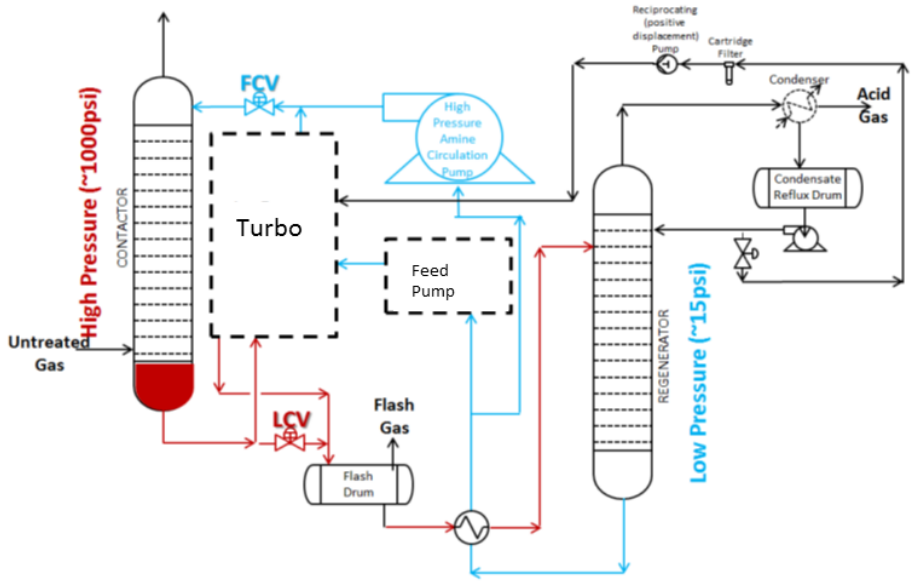

Figure 10: Simplified PFD with reflux condensate bearing lubrication

In this lubrication scheme, reflux condensate is sent through a cartridge filter to insure against any particulate matter that may be picked up from process piping and is boosted to the required pressure using a positive displacement pump and delivered to the hydraulic turbocharger, where it is routed to the thrust bearing and the center bearing. The only requirement for application of this alternative lubrication scheme is that the volume of reflux condensate and make-up water is adequate for GP Turbo lubrication.

For the case study plant in Northeast China, a lubrication skid was designed, fabricated and installed for lubrication of the previously failed turbocharger using condensate from reflux tank (instead of process solvent). The skid consists of two high-pressure positive displacement pumps in parallel for redundancy, along with strainers and dual cartridge filters. Figure 11 shows this lubrication pump skid.

This system has been installed on the two trains in this facility, and both units have started up without incident. The units have been running since startup with trouble free operation. The plant is quite satisfied with their operation.

The only required maintenance is replacing cartridge filters after 2 months of operation. Since the cartridge

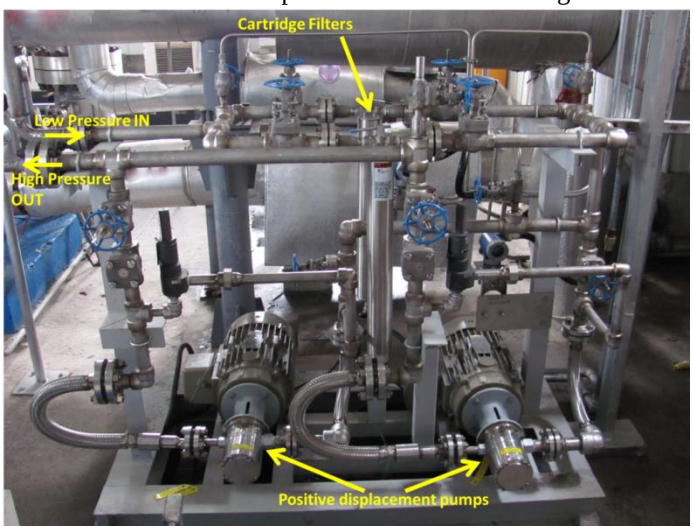

filters are in parallel, the filter replacement does not

Figure 11: Photo of lubrication skid installed at plant

interrupt turbocharger or process operation.

The customer reports cost savings of $1,000,000 USD/year at approximately $0.10/kWh (two units). The cost savings are a function of the turbocharger system performance, operating hours, energy cost, and previous system performance. In this case, the previous system was a level control valve for pressure letdown from the contactor to regenerator and a high pressure pump driven by electric motor to bring the MDEA process solvent back to contactor pressure. The system operated

continuously.

With 328 KW of pump power provided by the hydraulic turbocharger, 328 KW less the efficiency of the previous pump and motor was consumed. With a pump efficiency of 60% and motor efficiency of 98%, this is 558 kW power saved. Annually, this represents 4887 MWh of energy savings on each train.

The capital investment required for the turbocharger system and additional pump skid was greater than replacing the existing pump and motor with similar, new equipment. The capital cost comparison to an API 610 pump and motor is about 85% greater with the turbocharger system, including auxiliary equipment and reflux condensate lubrication systems. From a life cycle cost perspective, this is offset by the energy and maintenance savings of the turbocharger system. The resulting life cycle cost reduction is forecasted at 46% over a 20 year period compared to the previous letdown valve and electrically driven API 610 pump.

CONCLUSIONS

1. Hydraulic turbochargers are a viable technology for reducing energy consumption in acid gas removal processes.
2. Filtration of the lubricating fluid of the hydraulic turbocharger in AGR applications is highly recommended due to the uncertain nature of the particulate loading in these systems.
3. Life cycle costs of the turbocharger based system are lower than API pumps. In the case of one particular plant, electrical energy savings resulting from the hydraulic turbocharger energy recovery solution represented approximately $1,000,000 per year in energy savings and a 46% reduction in 20 year life cycle costs.
4. Reflux condensate is a viable AGRU process fluid for turbocharger bearing lubrication in cases where the lean solvent is highly contaminated and filter change requirements to meet bearing lubrication specifications are unacceptably frequent.

NOMENCLATURE

PFD = Process Flow Diagram
AGR = Acid gas removal
AGRU = Acid gas removal unit
HPLAC = High pressure lean amine circulation pump
GPM = Gallon per minute
LCV = Level control valve
MDEA = Methyl Diethanolamine
MTTF = Mean time to failure

ACKNOWLEDGEMENTS

We would like to acknowledge the members of the engineering and service team at Energy Recovery that worked on the product and solution presented here.

REFERENCES

[1] Marscher, William D. *Avoiding Failures in Centrifugal Pumps.* Proceedings of the 19th Annual Pump Symposium. Pg. 157-175.

[2] *Handbook of Reliability Prediction Procedures for Mechanical Equipment*. Naval Surface Warfare Center, Carderock Division. Department of the US Navy. May 2011.

[3] Topside Equipment. Volume 1. OREDA 2009