Achieving High Chilled Water Delta T without Blending Station

Zhan Wang, Gang Wang, Ke Xu, Yuebin Yu and Mingsheng Liu
Energy System Laboratory, Department of Architectural Engineering
University of Nebraska-Lincoln, Omaha, NE 68182, USA

ABSTRACT

Typically a blending station is designed to ensure that its user is able to avoid low chilled water return temperature in the district cooling system. When the chilled water return temperature drops to a low limit, building return water is blended into building supply water to reduce primary chilled water flow and finally increase building chilled water return. However, the blending station will cause extra pump power and may cause humidity and temperature issues. Theoretical analysis has been conducted on the blending station performance. The results show that the blending station is not necessary in the building chilled water systems with 2-way modulation valves at end users. Actually the end user valve configuration and control mainly impacts building chilled water temperature. As soon as the water flow control is improved, the chilled water return temperature can be controlled without the blending stations. This paper presents actual system operation data and optimal control measures at three buildings which receive chilled water from a district cooling system.

1. INTRODUCTION

Many buildings installed the chilled water blending station have the problem that by using blending station to maintain a proper return chilled water (CHW) temperature from the buildings, the actual supply chilled water temperature to the buildings are normally 3-5°F higher than the design supply chilled water temperature required by the end units such as air handling units (AHU), fan coils and induction units. This temperature is 42°F (5°C) which is maintained by the district cooling system. With the higher supply chilled water, cooling coil on the AHU side can not work properly as it was designed. It has the following problems on the systems and building environment in regard to the space temperature and relative humidity:

(1) The set point of the supply air temperature, 55°F (13°C), can not be maintained with the higher supply chilled water temperature after the blending station. Unwanted moisture can not be removed by the cooling coil. Buildings will suffer humidity problems.

(2) The power of circulating pump, either

constant speed or with a VFD, will transform to the chilled water as the extra cooling load;

(3) For variable air volume (VAV) systems, the supply air flow rate will increase to compensate the higher supply air temperature. Thus more fan power will transform from the shaft to air flow as the extra cooling load.

The chilled water blending station is mainly designed based on an assumption that the return chilled water temperature decreases under partial cooling load conditions. However, several researchers confirmed that the chilled water return temperature can still maintain a high level without the blending station. Landman [1991] compared cooling coil performances between the design condition and off-design condition. The simulated cooling coil chilled water return temperature increases rather than decreases under partial cooling loads. It increases from 58°F (14°C) to 61°F (16°C) with a 42°F (5°C) constant chilled water supply temperature when the supply air flow decreases from the design value by half. Therefore, the partial load is not the main reason for the lower chilled water return temperature. Kreutzmann [2002] demonstrated a district cooling system without a bypass bridge blend at consumer connections. The chilled water temperature differential grew from 4-11°F (2-6°C) to 16-21°F (9-12°C) after all 3-way control valves in the system were converted to 2-way valves. It seems that the use of 3-way control valves is accused of the lower chilled water temperature differential. Wang [2006] investigated the cooling coil performance by the simulation method and addressed that the main reason for the low chilled water return temperature is the use of 3-way cooling coil control valves rather than the partial cooling loads if the cooling coil is designed, operated and maintained properly.

The purpose of this paper is to present that in the real facilities, chilled water return temperature can be maintained properly without the chilled water blending station. Both first cost of the blending station and operation cost can be reduced.

2. FACILITIES INFORMATION

Figure 1 depicts a layout of three different buildings in Omaha. The miles in Figure 1 demonstrate the roughly pipeline distance between the central plant and the building. One common thing of the three buildings is that they have installed chilled water blending stations. The other common thing is that their chilled water and steam are provided by the Energy System Company (ESC), a district heating and cooling

provider.

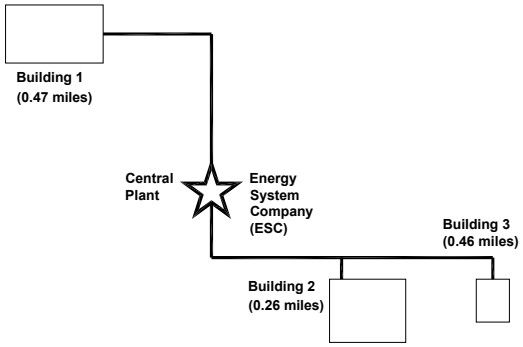

Fig. 1: Schematic layout of the three buildings and the central plant

The chilled water rates are provided by ESC based on the monthly average water flow rate per tonnage, shown in Table 1 and Table 2. Delta T (ΔT) is the difference between the building return chilled water temperature and the primary supply chilled water temperature, normally 42°F (5°C). The higher the delta T, the lower the chilled water rates are.

Table 1: Winter CHW rates (Oct - Apr)

Average flow rate (GPM/ton)	Average ΔT (ºF)	Rates (cents/ton·hour)
< 1.70	≥ 14	22.29
> 1.71	< 14	23.29

Table 2: Summer CHW rates (May - Sep)

Average flow rate (GPM/ton)	Average ΔT(ºF)	Rates (cents/ton·hour)
< 1.70	≥ 14	22.29
1.71 ~ 2.00	12 ~ 14	23.29
2.01 ~ 2.40	10 ~ 12	24.29
2.41 ~ 3.00	8 ~ 10	25.29
> 3.01	< 8	28.29

Notes: Monthly average $\Delta T = \frac{\sum \Delta T_i \cdot GPM_i}{\sum GPM_i}$, developed by ESC.

Figure 2 depicts the schematic diagrams for two conventional blending station connections. The (a) connection with a variable speed circulating pump was applied in building 1 while the (b) connection with the constant speed circulating pumps was applied in building 2 and 3. The end units, including AHU cooling coils, fan coils, and induction units, use either 2-way or 3-way control valves to maintain the supply air temperature or space temperature at the set point in the buildings.

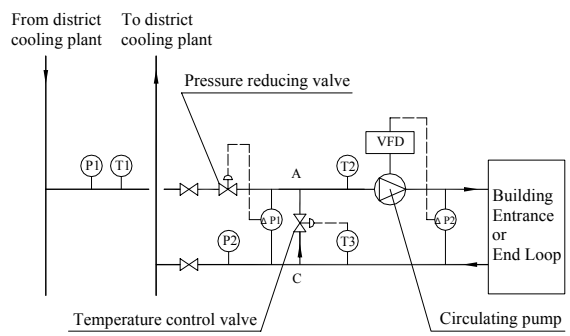

(a) Variable speed circulating pump

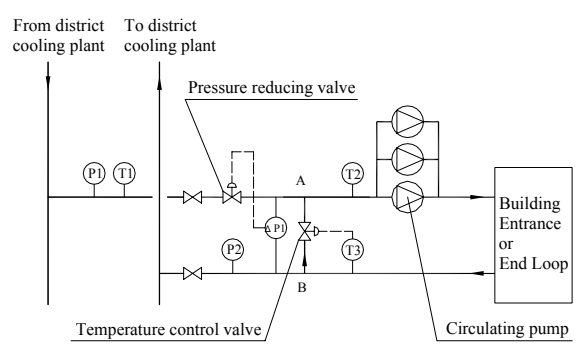

(b) Constant speed circulating pump

Fig. 2: Conventional connection of CHW blending station

Since the pressure of district chilled water

supply line (P1) is higher than that of the system return line (P2), a pressure reducing valve (PRV) and a circulating pump have to be installed on the chilled water supply line in order to provide a higher pressure at point B than that at point A. Then, the building return water is able to blend with the district supply chilled water through the bypass bridge with a temperature control valve (TCV). T2 is the mixing temperature of the district supply chilled water (T1) and the return chilled water (T3). The circulating pump speed can be constant or variable with a VFD. The basic control sequence to operate the blending station is:

(1) PRV is modulated to maintain the secondary supply chilled water pressure, ΔP1, at the set point;

(2) If installed VFD, circulating pump is modulated to maintain the differential pressure (ΔP2) at the set point;

(3) If circulating pump speed is constant, the number of the enabled pump(s) depends on the building load or outside air temperature;

(4) TCV is modulated to maintain the return chilled water temperature (T3) at the set point which could be reset by the secondary supply chilled water temperature (T2).

Brief building and blending station information before the retrofit is summarized in Table 3.

Table 3: Brief building and blending station information before the retrofit

Item	Bldg 1	Bldg2	Bldg 3
Type of building	Museum	Office	Office
Operation hours per day	24	14	24
Number of blending station	2	1	1
Circulating pump configuration for each blending station	1 with a VFD	3 constant speed	3 constant speed
Horse power Of each circulating pump	20	10	40
End user valve configuration	2-way	2-way & 3-way	2-way & 3-way
T2 range (°F)	42~45	42~47	42~48

Building 1 had lower chilled water delta T, which didn't qualify its owner for ESC's lowest chilled water rate. It used a narrower T2 range than that of the other two buildings because of the strict humidity and temperature control for collections in the museum. Meanwhile, the chilled water balance was fairly poor in the museum. Liu [2002] demonstrated that sometimes lower delta T is due to the poor water balance, which has to be improved if the blending station will be disabled. The water balance in building 2 and building 3 were poor too.

But they applied a wide T2 range to ensure a good delta T by sacrificing building humidity control. Meanwhile, more pump power was consumed for the blending station, especially on building 2 and building 3.

3. IMPROVED CONNECTION AND INNOVATIVE OPERATION

The low chilled water delta T is caused by the use of 3-way control valves or poor water balance if the cooling coil is designed, operated and maintained properly. After converting all control valves from the 3-way valve to the 2-way valve and improving the water balance, the chilled water return temperature is always higher than its design value and it is not necessary to install a bypass bridge at consumer connections (Wang et al. 2006). Figure 3 demonstrates the improved consumer connection after the retrofit by fully closing the TCV all the time. The modulating valve and circulating pump are combined to maintain the required differential pressure (ΔP) or the building return water temperature. Obviously, the circulating pump is not required if the district cooling system can provide enough differential pressure to the end units.

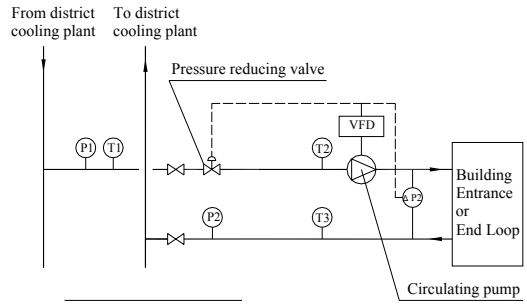

a. Variable speed circulating pump

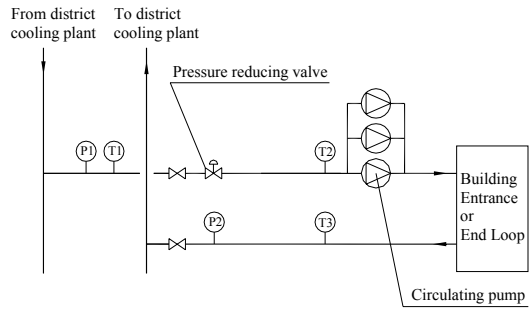

b. Constant speed circulating pump

Fig. 3: Improved consumer connection

The improved control sequence for the new connection with a variable speed circulating pump is:

(1) If PRV is *not* full open, disable circulating pump and modulate PRV to maintain the differential pressure (ΔP2) at the set point, which can be reset by the building load.

(2) If PRV is full open and the differential pressure (ΔP) could not be maintained, modulate the circulating pump to maintain the differential pressure (ΔP) to keep PRV full open;

The improved control sequence for the new connection with constant speed circulating pumps is:

(1) If PRV is *not* full open, disable

circulating pump and modulate PRV to maintain the building return water temperature (T3) at the set point.

(2) If PRV is full open and the building return water temperature (T3) is higher than the set point, enable one, two or three circulating pumps to maintain T3 at the acceptable range to keep PRV full open.

4. RESULTS

Figure 4 shows the trending delta T of Building 1 every 5 minutes for two days in June after the implementation of Continuous Commissioning® (CC®) technologies by blocking the bypass bridge, improving water balance and operating AHU cooling coil and fan coil properly. The time average delta T is over 14 degree. Since the primary supply chilled water temperature from district cooling system is almost constant at 42°F (5°C), the building return chilled water temperature should be higher than 56°F (13°C). ESC reported 14.8°F (8.3°C) for the calculated average delta T in June, which qualified building 1 for the lowest chilled water rate. An average delta T comparison is presented in Figure 5. Building 1 had a lower delta T problem for a long time even with a blending station before the retrofit. The consecutive four-month data from ESC confirm that the higher delta T can be achieved without the blending station. Meanwhile, pump electric consumption has been reduced much although pumps have already had a VFD since the pumps are enabled only when the differential pressure (ΔP) can not be maintained.

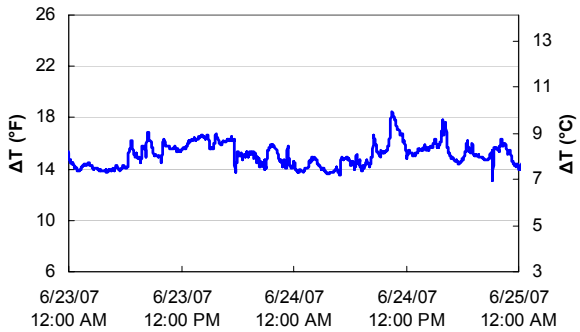

Fig. 4: Trending data of delta T in building 1 after CC®

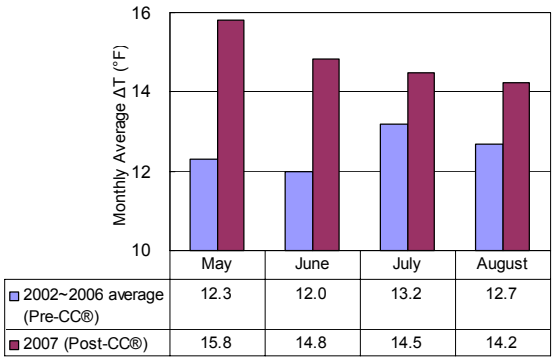

Fig. 5: Comparison of delta T in building 1

The blending station has been disabled by CC® technologies in building 2 and building 3 too. Figure 6 shows that the chilled water delta T in building 2 has been improved without using the circulating pumps in May and June 2007 comparing to that in 2005

and 2006. With the building load increasing, the constant chilled water pumps had been used in July, 2007. However, two of the total three AHU cooling coils were using the three-way valve, which bypassed certain amount of chilled water when the chilled water valves were partially open. It drew the delta T to 13.2°F (7.3°C) in July 2007. After the retrofit by converting all control valves from the 3-way valve to the 2-way valve, a higher delta T in August 2007 was achieved as high as 14.5°F (8.1°C). Figure 7 presents the consecutive three-month improved chilled water delta T before and after converting all 3-way cooling coil control valves to the 2-way valve, blocking the bypass bridge, improving water balance, and operating AHU cooling coil and fan coil properly. Since pumps are enabled only if the building return water temperature is higher than the set point in the two buildings, significant electric consumption has been saved on those constant speed pumps. Meanwhile, building humidity has been controlled properly because all end units can always have the 42°F (5°C) inlet chilled water, which is enough for the AHU cooling coils to remove the moisture.

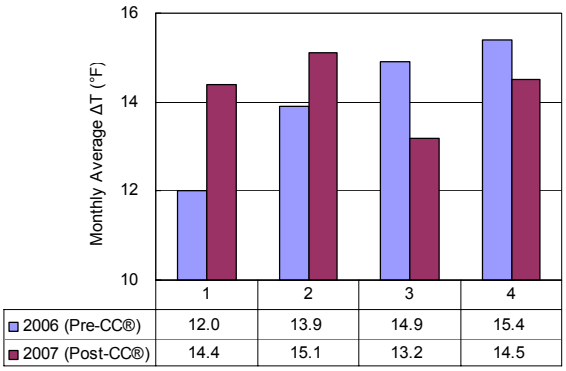

Fig. 6: Comparison of delta T in building 2

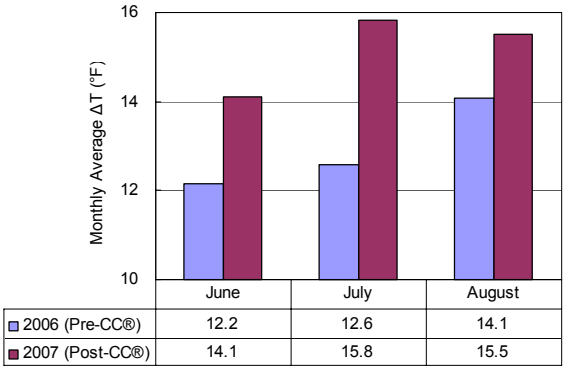

Fig. 7: Comparison of delta T in building 3

5. CONCLUSION

Generally, a chilled water blending station is installed in a building that does not have any dedicated chiller. The chilled water is supplied from a central plant to the building with a higher return water temperature requirement. The blending station blends part of the building return water with primary chilled water before sending it to the end units. This maintains the return water temperature within the required range. But using the blending station causes extra pump electric

consumption and may also cause a humidity problem in the buildings. The results of the case studies presented in this paper confirm that a proper delta T can be maintained without the blending station. This can be achieved as long as all the 3-way cooling coil valves are converted to the 2-way valve, the water loop balance in the building is improved, and AHU cooling coils and fan coils are operated properly. The benefit of disabling the blending station in 3 buildings reveals:

- Return chilled water or delta T can be maintained as high as required, which qualifies the buildings for the lowest chilled water rate;
- Significant pump electric consumption has been reduced;
- The space relative humidity has been controlled properly. Thermal comfort has been improved.

REFERENCES

[1] Landman, W. 1991. *A New Era of Free Cooling*. Engineer Newsletter. Vol. 20, No. 3.

[2] Liu, M., D. E. Claridge, and W. D. Turner. 2002. *Continuing Commissioning® Guidebook for Federal Energy Managers*. Federal Energy Management Program, U. S. Department of Energy.

[3] Kreutzmann, J. 2002. *Campus cooling: Retrofitting systems. HPAC Heating, Piping, Air Conditioning Engineering*, Vol. 74, No. 7, P 27-34

[4] Wang, G., B. Zheng and M. Liu. 2006. *Impacts on Building Return Water Temperature in District Cooling Systems*. International Solar Energy Conference, Denver, Colorado, 2006