Application of Wireless Sensor Network (WSN) Technologies in Optimal Static Pressure Reset in Variable Air Volume (VAV) System

Keke Zheng
Graduate Student

Haorong Li
Assistant Professor

Huojun Yang
Graduate Student

Architectural Engineering
University of Nebraska-Lincoln
Omaha, NE 68182

ABSTRACT

Optimization of the static pressure reset is always critical in the pursuit of maximum savings of fan power and thermal energy consumption in a VAV system. This paper theoretically investigated three static pressure reset methods, i.e. VAV terminal unit damper position based, outside air temperature based and air flow based, and proposed an optimal static pressure reset method. Subsequently, hourly simulations of a building in Omaha, Nebraska, USA, was implemented and validated that the VAV system with the optimal reset method could consume the least fan energy without sacrificing thermal comfort. Furthermore, in consideration of typical advantages of wireless technologies compared with traditional direct digital control (DDC) in building control systems, this paper also proposed a new control strategy combining with the WSN and the damper position based reset method, i.e. cascade VAV optimal control strategy.

INTRODUCTION

For VAV systems, fan power and thermal energy saving is one distinguished feature compared to constant-air-volume systems (Taylor 2007, Englander 1993, Lorenzetti 1993). It is frequent in a VAV system that the load and thus air flow rate deviates from design due to changes in operating conditions. These variations in air flow rate will result in the change of the static pressure demanding, i.e. the reset of the static pressure. Supply fan is typically controlled to maintain the static pressure setpoint, shown in Figure 1. The maximum setpoint is the sum of the duct pressure loss down stream of the sensor to the terminal box and the terminal box pressure requirement under the design airflow. (ASHRAE handbook 2005)

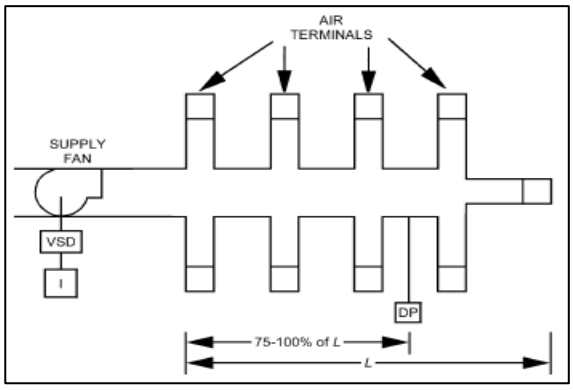

Figure 1 Duct static pressure control in a VAV system

There are several substantial benefits to lower the static pressure set point including reducing air leakage, reducing fan power, reducing heating and cooling energy consumption due to excessive airflow, avoiding noise level in the terminal box with lower air velocity and reducing malfunction of terminal box due to excessive pressure. Considering the complex layouts, varying system geometry, non-simultaneous variations in zone loads, and other influences for real system, reset can generate energy savings from 30% to 50% in comparison of constant static pressure setpoint when operating at part-load conditions (Hartman 1993; Taylor 2007).

Currently, the static pressure reset strategy is mainly implemented through traditional hard-wired DDC methods, which would be inappropriate especially for specific applications such as in historic buildings. Also traditional hard-wired control or sensing applications can be difficult and expensive, while WSN can deliver significant cost savings and improved operational efficiencies (ASHRAE 2002, William 2005).

In building controlling system, wireless technologies have been receiving more attention,

especially for retrofit application for its unique advantages in comparison with traditional wire DDC technology. Some typical advantages of WSN are generalized as below (Bill 2003；William 2005): greatly simplify the deployment of large sensor networks; make sensing quantities easier, especially for short term monitoring, commissioning; reduce the costs for installation of sensors (the wiring costs, non-invasive to the space, flexible sensor deployment); useful in some cases: in the absence of prior knowledge of the problems (e.g. moisture damage) .

The application of WSN in the building HVAC system can play an important role in the control optimization and energy saving fields. There are still lots of opportunities to implement WSN technology and improve the existing mechanical design and energy optimization.

The purpose of this paper is to theoretically investigate the optimal static pressure reset method among the exsiting methods; then propose a control strategy based on WSN to implement the optimal reset method.

INVESTIGATION OF THREE STATIC PRESSURE RESET METHODS

Three static pressure control methods encountered include outside air based, airflow based and VAV terminal unit damper position based. Below illustrates typical principle for each method and optimal reset method is theoretically analyzed to be the damper position based.

Outside Air Temperature Based

The static pressure could be simply reset based on the outside air temperature. A common reset control strategy is to raise discharge air temperature setpoint when outdoor air is cold and lower the setpoint when it is warm. When the outside air is cold, the static pressure could be decreased since the supply and room temperature difference is higher. When the outside air is warm, the static pressure could be increased since the cooling load is usually higher. This reset schedule is very effective in envelope-dominated buildings, for example, buildings with large ratios of exterior zones. It also works for the building of which most served zones having similar loads and are dependent on outside air temperature.

A Typical static pressure reset based on the outside air temperature is show in Figure 2(Liu 2007). It is based on the supposition that the building load is a linear function of the outside air temperature, which is an approximate method as described below.

$$Q = Q_i + Q_e + Q_{cond} + Q_{solar} \quad (1)$$

where Q: total building load; Q_i: internal gain; Q_e: loss/gain through building envelope; Q_{cond}: load gain through conduction; Q_{solar}: load gain from solar.

For a typical exterior zone and a specified period, assuming

$$Q_i = Const, \quad Q = Q_{\text{cond}} + Q_{\text{solar}} = f(T_{oa})$$

where T_{oa}: the outside air temperature;

$f(T_{\text{oa}}) = k \cdot T_{oa} + C$, k and C are all constants.

This method is very easy to implement in a DDC control system or controller. However, the potential energy savings depends primarily on the maximum and the minimum static setpoint and the outside air temperatures. It is suitable for buildings with simple control systems and with limited terminal box information.

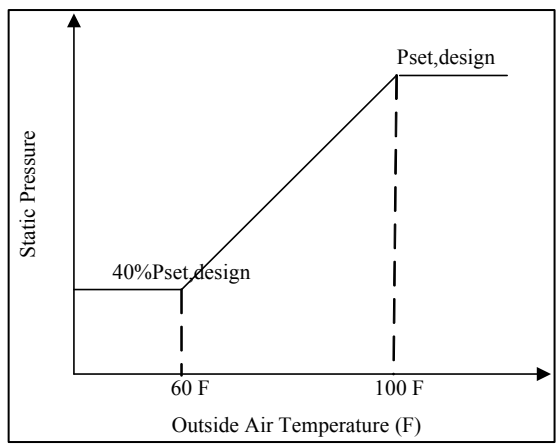

Figure 2. A typical static pressure reset based on the outside air temperature

Fan Airflow Ratio Based

The static pressure could be reset based on fan airflow if airflow is measured. Due to the different load ratios in different zones at the same time, the static pressure set point is often determined based on the ideal reset value which is proportional to the square of airflow ratio and an additional correction value. With the development of fan airflow station to ensure accurate measurement of actual fan airflow, it is implemented with more than 50% fan power savings in a real dual-duct VAV system by integrating the static pressure reset with fan airflow station.

As shown in Figure 3(Liu 2007). The ideal situation is that the load ratio in each zone is the same, then

$$P_{set} = P_{set,d}\left(\frac{CFM}{CFM_d}\right)^2 \qquad (2)$$

Actually, the difference always exists (i.e., the load ratio is not uniform). The recommend set value is calculated by the experience formula below (Liu 2007):

$$P_{set} = Max\left\{(1-\alpha)(\frac{Q}{Q_d})^2 + \alpha,\ \alpha_{\min}\right\}P_{set,d} \qquad (3)$$

Where

α : *diversity factor* $\qquad \alpha_{\min}$: $P_{set,\min} / P_{set,d}$

As seen from the formula, the determination for diversity factor shall be the main disadvantage.

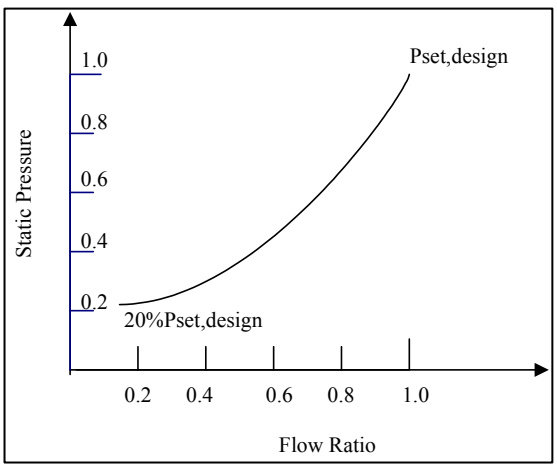

Figure 3. A typical static pressure schedule reset based on the air flow ratio

VAV Box or Zone Damper Position Based

An alternate reset schedule is based on VAV box damper position. When an AHU system has full DDC control and feedback on VAV terminal unit damper positions, the static pressure can be modulated based upon these damper positions. Feedback from the terminal units may be the actual damper position signal for modulation the damper actuators or an estimated position based on the timing of open and close signal when floating actuators are utilized. In either case, as zone loads are satisified, then the terminal unit dampers begin to close and the static pressure setpoint is lowered until a particular number of terminal unit dampers are at a predetermined position. The reverse operation is executed when zone loads increase.

The advantage is that it is based directly on actual zone load. However, the inherent disadvantage is that either all or selected VAV terminal units must be polled by the DDC control system. For large systems, the control network may not have sufficient speed or capacity to handle the required data transfer. If only selected units are polled, these units must represent all the zones and avoid thermal comfort problems.

Mathematical Formulation of the Optimal Reset Method

For an air distribution system to function properly, the pressure rise provided by the fan should match the pressure losses across the ductwork. As shown in Figure 4, system curve 1 is for the duct system without any fully open damper. By modulating the fan speed to maintain one damper fully open, the system duct impedance will decrease, thus, the new system curve can be closer to the original design system curve, the total pressure loss will be close to the ideal condition (at the same given airflow), system curve 2 is the duct system curve with at least one damper fully open. Obviously, system curve 2 is closer to original design system curve.

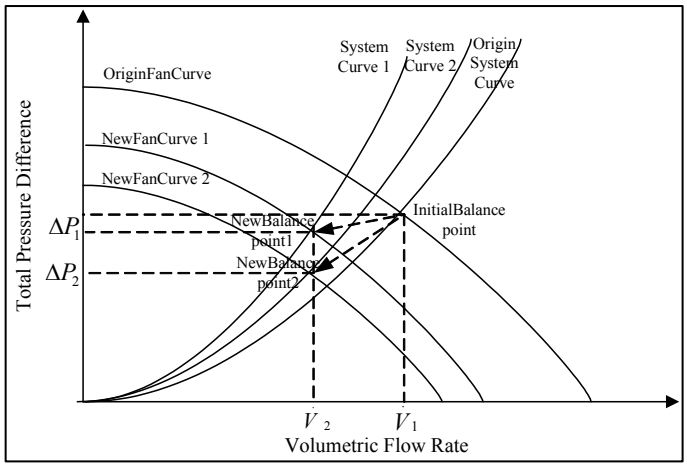

Figure 4. A typical static pressure reset based on the damper position

Under the same partial load condition (i.e. the same volumetric flow rate V_2), the new system balance points are point 1 and point 2, shown in Figure 4, we can see both the fan power requirement are much less than the initial balance point. However, consumption of fan power in balance point 2 is less than balance point 1. Comparison of the fan power consumption can be seen as below:

For the balance point 1 and 2, the fan power consumption is:

$$\dot{W}_{fan,1} = C \times \dot{V}_2 \times \Delta P_1 / \eta_f \quad (4)$$

$$\dot{W}_{fan,2} = C \times \dot{V}_2 \times \Delta P_2 / \eta_f \quad (5)$$

and $$\Delta P_1 > \Delta P_2 \quad (6)$$

then $$\dot{W}_{fan,1} > \dot{W}_{fan,2} \quad (7)$$

However, in reality, the difference of the load ratio among different conditioned zones always exists (i.e. the load ratio is not uniform). Therefore, it is necessary to determine which damper should be fully open under the partial load condition.

Following, a deduction is given to determine the fully open damper to acquire the optimal energy saving.

A typical ductwork layout in an AHU system is shown in Figure 5.

Assume the building is in a given load situation. When each branch's terminal unit damper is fully open, the total pressure loss of each can reach the minimum value seperately:

$$\Delta P_{i,\min} = \sum_{j=1}^{n_i} (C_{i,j} (\dot{V}_{i,j})^2) + C_{i,\min} (\dot{V}_i)^2 \quad (8)$$

where n : total number of branches;
i: the ith branch;
j: the jth section of branch i;
n_i: total number of sections for branch i;
$\Delta P_{i,min}$: minimum pressure drop of branch i (the damper of branch i is fully open) ;
$C_{i,j}$: duct coefficient of the jth section of branch i;
$C_{i,min}$: minimum damper coefficient of branch i (the damper of branch i is fully open) ;
$\dot{V}_i$: airflow of the branch i (zone i);
$\dot{V}_{i,j}$: duct flow rate of the jth section of branch i.

In equation (8), $C_{i,j}$ is always unchanged for a specified ductwork; $C_{i,min}$ is constant for a fully open damper; $\dot{V}_{i,j}$ is determined by the building load, and constant for a specified building load value. Therefore, $\Delta P_{i,min}$ is also a constant value for a specified building load condition.

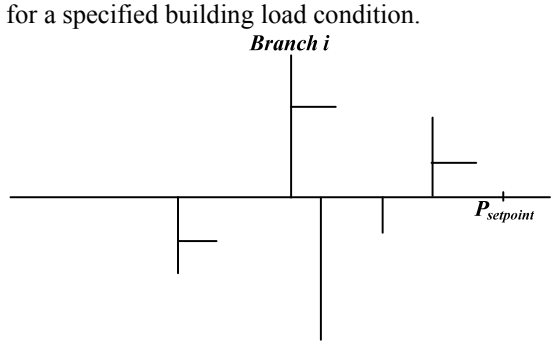

Figure 5 Schematic of a typical duct layout in an AHU system

In order to provide required airflow for each zone(branch), the fan head should satisify all the

branches' pressure loss demanding as shown in equation (8); thus the required airflow for each zone can be satified to maintain zone thermal comfort. For the whole system, to ensure each zone(branch)'s supply airflow requirement, the system pressure loss(ΔP) across the whole ductwork, which is equal to the required fan head value, should be the maximum one among all the branches and satisify equation (9):

$$\Delta P \geq \max_{i=1}^{n}(\Delta P_{i,\min}) \qquad (9)$$

Considering the pressure rise provided by the fan should match the pressure losses across the ductwork, the minimum pressure loss across whole ductwork should be:

$$\Delta P_{\min} = \max_{i=1}^{n}(\Delta P_{i,\min}) = \Delta P_{k,\min} \qquad (10)$$

Equation (10) shows that the system pressure loss across the ductwork should be the branch k, the pressure loss of which is the highest one among all the n branches. Obviously, for each specified building load, the ΔP_{min} is unique, i.e. at least the branch k satisify this equation. Usually, at least the terminal damper of branch k should keep fully open to implement the static pressure reset based on damper position.

As the analysis above, the optimal method is proved to be the reset based on the box damper position.

SYSTEM SIMULATION

The static pressure reset is implemented in Omaha NE, USA, to make a comparison for the different static pressure reset methods. Based on the BIN weather data (TMY2\OMAHA-NE.bin), a simulation software is used to simulate a office building to get the hour-by-hour zone load distribution, through which the total ducts' size and layout are determined manually in Figure 6.

Below is the basic information for this building:

Building type: office Bldg refer to Figure 5;
Area: 25000ft^2 (158×158ft);
Floor: one;
Floor heights: Flr-Flr 12ft;
Flr-Cel: 9.0ft;
Building Envelope Construction: refer to Table 1.
Ground Floor: earth contact;
6 in. concrete *construction*;
Vinyl Tile for *interior finish*;
no perimeter *insulation*;

Building Interior Construction:

Ceilings: interior finish: lay-in acoustic tile, no ceiling insulation;
vertical wall: air;
Window: Double Clear/tint category window;
Door: air lock entry door.

Table 1.
Building Envelope Construction

	Roof Surface	Above Grade Walls
Exterior. Finish	Roof built up	Stucco/gunite
Exterior. Insulation	3 in. polyurethane (R-16)	3/4 in. fiber bd sheathing(R-2)
Additional insulation	No bat or barrier	R-19 Batt
Interior insulation	No	No board insulation
construction	Metal frame	Metal frame

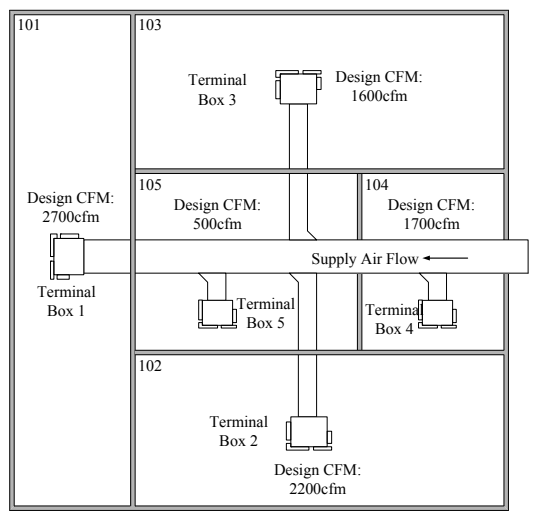

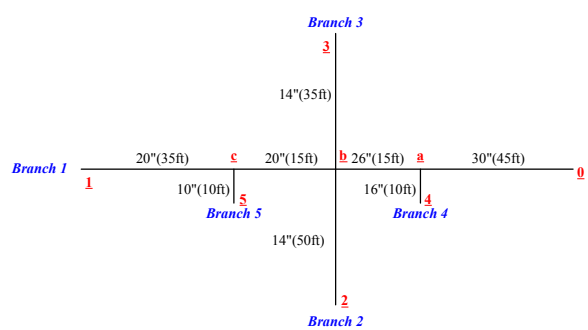

Figure 6. Building plan, duct layout and size in the simulation

A typical VAV air handling unit (AHU) system is shown in Figure 7.

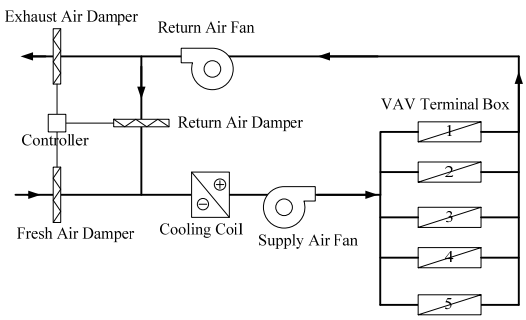

Figure 7. A typical AHU system in the simulation

SIMULATION RESULTS

The load simulation results on July 13 are selected to do the simulation by a spreadsheet model to compare the fan power saving and total pressure loss among these three static pressure reset methods.

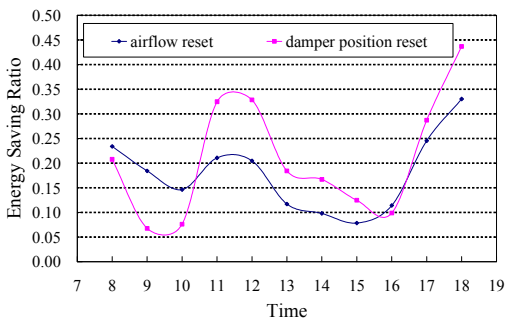

Figure 8. Comparison of energy saving ratio between the airflow and damper position based methods

Figure 9. Comparison of total pressure loss between the airflow and damper position based methods

In Figure 8, the savings ratio can be up to 44%. The fan power saving ratio of an air handling system with air flow based static pressure reset is compared with damper position static pressure reset. In Figure 9, the fan head (total pressure loss) of an air handling system with air flow based is compared with damper position based.

As seen from Figure 8, the system with damper position based static pressure reset consumes less fan power than the one with airflow based in most of the time except at 8am, 9am, 10 am and 4pm on July 13.

As seen from Figure 9, the fan head with damper position based static pressure reset is equal to the system required fan head. But the one with airflow based in most of the time is higher than the designed values, and less than the designed values at 8am, 9am, 10 am and 4pm, which will result in unsatisfactory supply air flow rate, and thus sacrifice the thermal comfort in the zones.

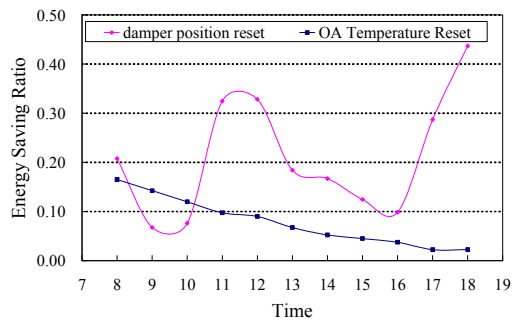

Figure 10. Comparison of energy saving ratio between T_{OA} and damper position based methods

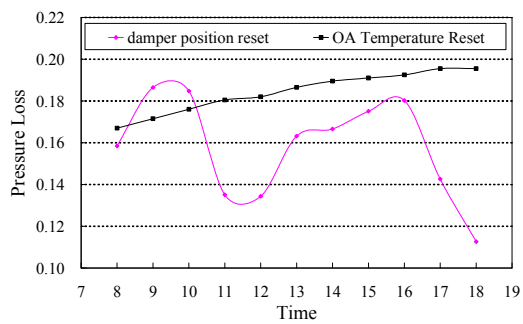

Figure 11. Comparison of total pressure loss between T_{OA} and damper position based methods

In Figure 10, the fan power saving ratio of an air handling system with T_{oa} based static pressure reset is compared with damper position static pressure reset. And the savings ratio can reach high as 44%. In Figure 11, the fan head (total pressure loss) of an air handling system with T_{oa} based static pressure reset is compared with damper

position static pressure reset.

As shown in Figure 10, the system with damper position based static pressure reset consumes less fan power than the one with T_{oa} based in most of the time except at 9am and 10 am.

As seen from Figure 11, the pressure loss with damper position based is also the same as the system required fan head. But the fan head with T_{oa} based in most of the time is higher than the required values and less than the required values at 9am and 10 am, which will result in unsatisfactory supply air flow rate, and thus cause the uncomfortable thermal environment.

WSN IMPLEMENTATION

For traditional DDC control way, there are some limitations for the method: Information data flow is so large that the DDC controller can't handle them easily based on the DDC communication topology (typical bus topology); No information of the damper status is available.

For damper position based static pressure reset strategy, all or selected VAV boxes must be polled to execute the sequence. If the building has numerous VAV boxes and all boxes are polled, then the amount of data being transferred across the network can severely limit the speed or capacity of the DDC system. If only selected boxes are polled, then extreme care must be taken when selecting the boxes to ensure comfort problems in non-selected zones are not created.

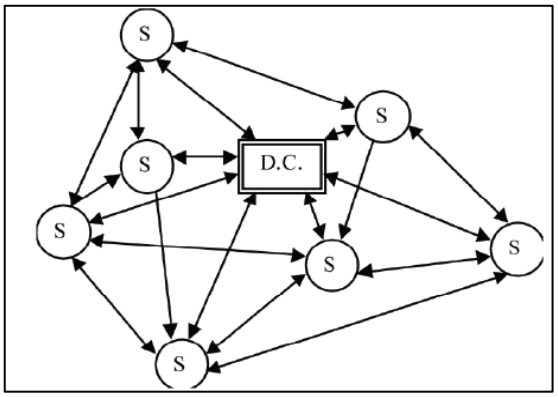

Figure 12. A Typical MESH topology of WSN

WSN can solve the problems by adopting the MESH topology, as shown in Figure 12. There are some unique characteristics for it: Sensors can communicate with each other; Sensor nodes can relay messages from other sensor nodes; Software controls the flow of messages through network; Messages can be confined to nodes; Self-configuring, Self-healing; new nodes automatically detected and incorporated.

.

Implementation of Control Strategy by WSN

By adopting the static pressure reset based on the box damper position, a cascade VAV optimal control strategy is developed, and the detailed block diagram is shown in Figure13.

It is a generalized schematic block-diagram for a closed-loop/feed back control system. In the main conrol loop, information related to the original damper positions (DP_r) in the designed condition are inputted as the reference, which is compared with the digital feedback signal(damper position of the critical zone), analyzed by the DP/Load analyzer, from the terminal boxes. In the imbedded secondary control loop, the static pressure ($P_{s,r}$) from the static pressure controller is adopted as the reference variable, comparing with the actual static pressure value (P_s).

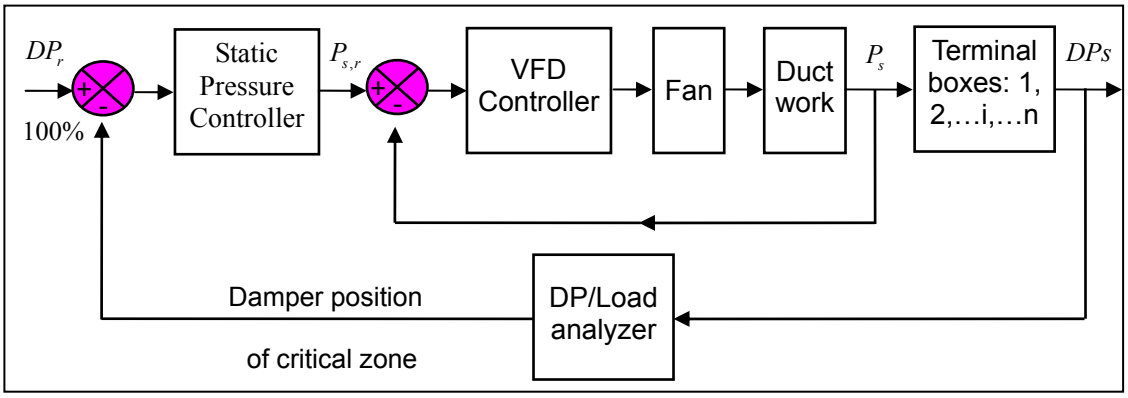

Figure 13. Cascade VAV optimal control strategy

CONCLUSION

By theoretical analysis and system simulation in a building, this paper validated that 1) for a typical AHU system, the static pressure reset can significantly improve the fan power savings; 2) the optimal static pressure reset is the damper position based. When the static pressure reset based on damper position used, obvious fan power energy consumption can be acquired, meanwhile the thermal environment comfort is maintained as designed.

Furthermore, this paper also found that the static pressure reset control logic of damper position based implemented by WSN could improve the complexities of the highly interaction between duct static pressure and damper position, encountered by traditional DDC strategy.

In general the combination of the optimal reset method and the WSN based control strategy is a promising and challenging way to keep VAV system with less energy consumption and more efficiency.

REFERENCES

Steven Taylor, 2007 "VAV System Static Pressure Setpoint Reset", ASHRAE Journal. June: 24-32.

S.L. Englander, 1993, "Saving fan energy in VAV systems Part 1: Analysis of a variable-speed-drive retrofit", ASHRAE Transaction 99(1): 3-18.

Thomas Hartmen, 1993. "Terminal regulated air volume(TRAV) systems", ASHRAE Transaction 99(1): 791-800.

D. M. Lorenzetti, 1992, "measured energy consumption of VAV fans under inlet van and variable-speed drive control", ASHRAE Transaction 98(1): 371-379.

American Society of Heating, Refrigeration and Air-Conditioning Engineers, Inc., 2005 "ASHARE Handbook: Fundamentals".

Mingsheng Liu, 2007 "Class Notes: Building Energy Systems Modeling, Control, and Optimization", Architectural Engineering Program, University of Nebraska-Lincoln;

William M. Healy, 2005 "wireless Sensor Networks for Applications In and Around Buildings", BFRL seminar.

Bill Healy, 2003 "The Use of Wireless Sensor Networks for Mapping Environmental Conditions in Buildings", ASHRAE seminar.

Patrick Kinney, 2003 "ZigBee Technology: Wireless Control that Simply Works", Communications Design Conference.

Jeff Raimo, 2006 "Wireless Mesh Controller Networks", ASHRAE Journal, Vol. 48.