COUPLING INTERFACE CONNECTION

by

Jon R. Mancuso

Director of Engineering

Kop-Flex Inc., Emerson Power Transmission Corporation

Baltimore, Maryland

and

Roger Jones

Senior Staff Engineer

Shell Oil Company

Houston, Texas

Jon R. Mancuso is Director of Engineering with Kop-Flex Inc., Emerson Power Transmission Corporation, in Baltimore, Maryland. He has more than 30 years experience in the coupling field and is author of many papers on couplings for various publications, societies, and symposia.

Mr. Mancuso is also author of a book on couplings, Coupling and Joints: Design, Selection, and Application*, and editor and author of several chapters in* Mechanical Power Transmission Components Handbook*. He has been involved with many design, research projects relating to couplings, and is coinventor of several patents with couplings and clutches.*

Mr. Mancuso graduated from Gannon University with a B.S. degree (Mechanical Engineering), and has an M.S. degree (Engineering Science) from Pennsylvania State University. He is chairing the ASME Committee on Couplings and Clutches. In addition, he is a member of the AGMA Coupling Committee, and also serves on the API Committee on Couplings for Special Purpose Applications.

Roger L. Jones is a Senior Staff Engineer with Shell Oil Company, in Houston, Texas. He is currently assigned to the Engineered Equipment Department of the Engineering and Construction Organization. In his current position, he provides consultation to projects with regard to specification, installation design, and field construction. He has previously completed various technical and management assignments at Shell's Deer Park Refinery and Chemical Plant. He has been in the rotating equipment field for more than 20 years.

Mr. Jones received his B.S. and M.S. degrees (Mechanical Engineering) from Kansas State University. He is a registered Professional Engineer in the State of Texas. Mr. Jones represents his company on the API Subcommittee for Mechanical Equipment and is a member of the API 610 and 682 Task Forces.

ABSTRACT

In rotating equipment, torque is usually transmitted from shafts to coupling hubs through keys, splines, friction, or a combination of these. Not covered in this tutorial are applications where the rotating equipment has integral flanges that bolt to the coupling. The type of interface, the fit, and materials used are dependent on the criticality of the equipment.

Equipment can be classified into general purpose and special purpose. General purpose equipment includes machines such as pumps that are spared. If they fail or require maintenance the operation does not shut down or slow down. In contrast special purpose equipment (compressor, generator) is critical to the process and if it is unavailable the entire plant might slow down, shut down, or might incur a safety incident or environmental incidence. Generally special purpose equipment is significantly more expensive than general purpose equipment and more sophistication is justified in the design of the interface.

The type of interface has also a lot to do with several other issues, including:

- Ease of assembly/disassembly
- Reliability of connection
- How much torque can be transmitted
- Field conditions

Most commonly for general purpose equipment keys with setscrews are used on small horsepower applications. For larger horsepower applications keys with interference bores are common. For critical equipment the most common interface is keys with interference. As the application gets more critical and power dense, keyless shrink drives and integral flanges become common. Tight fitted splines are common in aircraft derivative gas turbines.

The various types are covered in some detail for general purpose and special purpose applications. Covered also is how to assemble some of the most common types. Other issues such as who should bore the couplings, how does one fit bores and keys, and what needs to be considered when specifying interfaces is discussed. The types of couplings that are used on general purpose applications versus special purpose applications are discussed first.

COUPLINGS IN GENERAL

Flexible couplings can be classified by how they function or how they are applied. As to how they function they can be further classified into three basic functional types of flexible couplings:

- Mechanical element
- Elastomeric element
- Metallic element

The mechanical element types generally obtain their flexibility from loose-fitting parts or rolling or sliding of mating parts or from both. The most common types are the gear coupling and the grid coupling. They usually require lubrication unless one moving part

is made of a material that supplies its own lubrication need (e.g., a nylon gear coupling). The elastomeric element types obtain their flexibility from stretching or compressing a resilient material (rubber, plastic, etc.). Elastomeric elements are either the shear type or the compression type. The metallic element types obtain their flexibility from the flexing of thin metallic discs or diaphragms. There are over 100 variations of these types of couplings.

The three functional types serve two basic types of applications. These are:

- General purpose couplings
- Special purpose couplings

GENERAL PURPOSE COUPLINGS

General purpose couplings (low speed—generally motor speeds) are used on pumps and other equipment that if shut down will not slow down or shut down the plant or the process (Figure 1). These will transmit torque from one shaft to another while allowing misalignment and axial motion between the ends of the coupled shafts. General purpose types are generally more standardized, less sophisticated in design, and are substantially less expensive than special purpose types. Additionally they are used in substantially greater quantities than special purpose types.

In general purpose applications the flexible element can be routinely inspected and replaced. Often the coupling and its components are considered "throw-away parts." These types of couplings are usually very flexible and require simple alignment techniques. It is usually sufficient to align equipment with these couplings to within 0.001 in/in of shaft separation. Therefore a coupling with 5 inch shaft separation should be aligned to be within 0.005 inches. (Note that a 5 inch spacer is the minimum allowed by API 610 (1995) for process pumps.) A failure for this type of coupling is usually limited to the flex element and little or no damage usually occurs to other components. A few examples of general purpose couplings are the gear, grid, elastomeric, and the disc.

Figure 1. General Purpose Couplings.

Mechanical Element Couplings

The most common types of mechanical element coupling are the gear and the grid type.

- *Gear couplings* consist of two hubs with external teeth that engage internal teeth on a two- or one-piece sleeve. Gear couplings are used for medium and large applications, generally over 100 hp. Gear couplings have torque capacities up to 54,000,000 lb-in and bore capacities to 45 inches.

- *Grid couplings* are similar to gear couplings. They are usually composed of all metal and they have some degree of resilience. They have two hubs with serrations (grooves) rather than teeth. A steel grid connects the grooves. A cover keeps the lubricant in. Grids are generally limited to applications under 1000 hp. They have torque capacities up to 4,000,000 lb-in and bore capacities to 20 inches.

Elastomeric Element Couplings

Elastomeric element couplings are of either shear type or compression type.

- *Shear types* are generally found on applications under 100 hp. They have torque capacities up to 450,000 lb-in and bore capacities to 11 inches.

- *Compression types* are usually used on applications over 100 hp. They have torque capacities up to 20,000,000 lb-in and bore capacities to 34 inches.

Metallic Element Couplings

Metallic element couplings come in two basic types, the disc and the diaphragm.

- *Diaphragm couplings* are usually not used in general purpose applications. Diaphragm couplings are usually more costly than the other types.

- *Disc couplings* transmit torque by a simple tensile force between alternating driving and driven bolts on a common bolt circle. These couplings are generally used on applications over 100 hp. Many users apply lower limits and API 610 (1995) defaults to this coupling type for all pumps. They have torque capacities up to 4,000,000 lb-in and bore capacities to 15.5 inches.

SPECIAL PURPOSE COUPLINGS

A coupling moves from general purpose to special purpose when its design sophistication and reliability reach a high standard. Special purpose couplings are usually required for high speed (above motor speeds, i.e., greater than 3600 rpm) and for critical equipment within the production or process system (Figure 2). Couplings used in the petroleum, chemical, and gas industries are covered thoroughly in API 671 (1998).

Industry application practice is fairly consistent, that is, a pump coupling on a spared, redundant system. Almost any process plant from refinery to ammonia plant is not likely to have a special purpose unit. On the other hand a 67,000 hp unspared boiler feed pump in a base station or the compressor train in the same ammonia plant, as mentioned previously, is certainly special purpose and critical to troublefree operation. Most steam and gas turbine driven generator sets are special purpose applications. While there is a large body of machines and applications where there is an industry consensus that special purpose couplings should be applied, the lower end varies significantly by company

Figure 2. Special Purpose Couplings.

and industry segment. Generally however, expensive, high-powered, high-speed, and unspared equipment are connected by special purpose couplings. It is unusual for special purpose couplings to be applied at less than 1000 hp.

Another point is that although these machines are high powered, they are also sensitive to alignment and to misalignment induced loads. Alignment induced forces or moments become very important to these machines. As a result of this sensitivity and the speed and the power, coupling criteria for the machines take on an entirely different perspective. Alignment for this equipment is more critical than general purpose applications. Generally they should be aligned to within 0.0005 in/in of shaft separation. Therefore a coupling with 18 inch shaft separation should be aligned to be within 0.009 inch. In special purpose applications the coupling spacer is usually at least 18 inches in length (the minimum allowed by API 617 (1995)). Many users specify longer spacers and 36 inches or more is no longer unusual. Special purpose gear couplings are used for medium-large applications, generally on applications over 1000 hp. They have torque capacities up to 10,000,000 lb-in and bore capacities to 18 inches.

High Performance Gear Couplings

The first flexible couplings used in special purpose application evolved from the general purpose gear coupling. Heat-treated alloy components were used, then nitriding was added. On new applications where gear couplings are used it is not unusual for tooth enhancement to be used such as lapping and coatings. Early versions were generally batch lubricated with grease. In order to solve problems such as grease separation the couplings evolved to continuous oil lubrication. This eliminated lubricant deterioration and allowed couplings to run cooler since the heat generated is cared away by the oil. Unfortunately continuous lube couplings sometimes suffer from the buildup of very fine sediment that is centrifuged out of the oil, increasing friction in the teeth and sometimes even locking the coupling. Additional issues in the application of gear couplings are that their balance deteriorates with wear and the amount of frictional force developed in accommodating misalignment can increase with wear and/or lubricant deterioration.

How important an issue is friction between the gear teeth? Let us examine an average refinery application. This application is a hydrogen recycle compressor in a small hydrocracker or maybe a pretty large hydrotreater. The coupling must transmit 5000 hp at 10,000 rpm. The coupling gear teeth have a pitch diameter of 7 inches.

$$\begin{aligned} Torque &= 63{,}000 \times hp/rpm = lb-in \\ Torque &= 31{,}500\ lb-in \end{aligned} \tag{1}$$

The force transmitted across the gear teeth is:

$$\begin{aligned} Force\,(t) &= Torque\ /\ Pitch\ radius \\ Force\,(t) &= 9000\ lb \end{aligned} \tag{2}$$

The coefficient of friction for a grease packed coupling can vary from 0.05 to 0.15 depending on the type and condition of the grease. If the lubricant deteriorates, sediment builds up or if the surface finish of the teeth deteriorates the coefficient of friction will increase. For this illustration assume that the coefficient of friction of the teeth (μ) equals to 0.1, the average value for steel on steel. The force required to make the teeth slide is then:

$$\begin{aligned} Force\,(friction) &= \mu \times Force\,(f) \\ Force\,(f) &= 900\ lb \end{aligned} \tag{3}$$

The moment produced in a gear coupling can load equipment shafts and bearings. There are three basic moments in a gear coupling.

- The moment generated from transmission of torque through an angle (90 degrees from misalignment)
- The moment generated from the frictional load calculated above (90 degrees from misalignment)
- The moment generated from displacement of load (in the plane of misalignment)

For small angles (less than 1/4 degree) the bending moment of a gear coupling can be calculated by the following equation:

$$M_T = \sqrt{\left[\frac{M_T\,(x)}{R}\right]^2 + \left[\frac{M_T\left(\sin a + \mu\right)}{}\right]^2} \tag{4}$$

where:

M_T = Total bending moment in lb
x = Approximately the face width (FW) of the hub tooth divided by 2. FW is approximately the pitch diameter (PD) divided by 8.
R = The pitch diameter (PD) divided by 2
a = Misalignment angle in degrees

If the shafts are misaligned (and they always are to some degree) a considerable bending moment is imposed on the shaft.

- R = 3.5 inches
- μ = 0.1
- x = .875 inch
- a = 0.25 degrees

$$M_T = \sqrt{\left[\frac{31{,}500\,(.875)}{3.5}\right]^2 + \left[\frac{31{,}500\left(\sin 0.25 + 0.1\right)}{}\right]^2} \tag{5}$$

$$Moment = 8533\ lb-in$$

This will cause vibration and, in extreme cases, there have been shaft fatigue failures due to these moments.

Improved grease formulations have encouraged some users to move from continuous lube couplings back to grease lubricated couplings, but more often lubrication problems have pushed users to nonlubricated couplings (disc and diaphragm). In spite of the issues mentioned above, these couplings are highly reliable and long lasting. They still have a large and loyal following within the industry.

Elastomeric Element Couplings

Elastomeric element couplings for special purpose application are usually of the compression type. They are generally used on the low speed (motor to gear) side of a special purpose train. These couplings are used to reduce vibratory torques because they are soft and nonlinear. These features make it easy to torsionally tune a system (applications of synchronous motor, variable speed drives, reciprocating engines, or compressors, etc.) subject to pulsating torque. They are usually used on applications over 500 hp. They have torque capacities up to 20,000,000 lb-in and bore capacities to 34 inches.

The first choice of some users and many machinery manufacturers is to install a damper type coupling on anything where there is a pulsating torque. The main downside to this is that the damping capability of the coupling changes with the age of the damper elements. These elements are made of elastomers (rubber) and their durometer increases (they get harder and stiffer) with time. The damper elements must be replaced on a fixed interval. This interval is generally not convenient in applications such as refineries and petrochemical plants where turnaround intervals are fairly long. Owners of these couplings are often tempted to extend the replacement interval and risk failure in the machinery.

These couplings clearly have their place and a business decision should be made on their selection. Specifically what does it cost to tune the system with a conventional coupling, how certain is this nonelastomeric solution, and how disciplined is the user's operation to changing damper elements on schedule.

Metallic Element Couplings

These couplings come in two basic types, the *disc* and the *diaphragm*. Both have excellent inherent balance characteristics. Both come in reduced moment (flex element over shaft) types and marine types (flex element between shaft ends).

Disc Couplings

Disc couplings are usually used on applications where the flexible part of the coupling needs to fit over the shaft. Many typically higher speed compressors require this "reduced moment" feature for rotordynamic reasons. Disc couplings also tend to accommodate higher axial displacements. Many can accommodate axial displacement of 1/8 inch and others as much as 1/2 inch. These couplings are generally used on applications over 500 hp and speeds up to 20,000 rpm. They have torque capacities up to 5,000,000 lb-in and bore capacities to 18 inches.

Diaphragm Couplings

Diaphragm couplings flex and transmit torque between the outer diameter (OD) and inner diameter (ID) of the flex element. While the most common place diaphragm couplings are used on applications where the prime mover is a gas turbine, there are many users who prefer them over disc couplings and apply them in all the same applications noted above for disc couplings. On gas turbine applications they usually must bolt up to an integral flange (this type of coupling is usually called a marine type). These couplings are generally used on applications over 500 hp and speeds up to 20,000 rpm. They have torque capacities up to 6,000,000 lb-in and bore capacities to 20 inches.

COUPLING RATINGS (TORQUE RATINGS)

Before we get into the various types of interface connections, let us briefly discuss coupling ratings and service factors.

It has become more and more confusing as to what factor of safety (FS) and service factor (SF) (also application or experience factor) really mean. Many people use service factor and factor of safety interchangeably. There is an important distinction, however, and understanding the difference is essential to ensure a proper coupling selection for a particular application.

Service factors are sometimes used to account for the real operating conditions.

Design and Selection Criteria Terms

Factor of Safety

Factor of safety (FS) is used to cover uncertainties in a coupling design; analytical assumptions in stress analysis, material unknowns, manufacturing tolerances, etc. Under given design conditions the FS is the ratio of strength (or stress capacity) to actual predicted stress; where the stress is a function of torque, speed, misalignment, and axial displacement. A design factor of safety (DFS) is the factor of safety at the catalog rated conditions of torque, speed, misalignment, and axial displacement. It is used by the manufacturer to establish the coupling rating, because it is the maximum loading that the manufacturer says his coupling can safely withstand. The factor of safety that most would be interested in, however, is the factor of safety at the particular set of application loads that the coupling is continuously subjected to. This has been defined to be an application factor of safety (AFS). In fact, the application factor of safety is the measure of safety that would allow the coupling selector to evaluate the coupling that is the "safest" under actual operation and allow the coupling selector to compare various couplings.

Service Factor

Service factor (application factor or experience factor) (SF) is normally specified by the purchaser (although assistance is sometimes given by the manufacturer). It is a torque multiplier. It is applied to the operating torque (called the normal operating point in API 671 (1998)) of the connected equipment. The service factor torque multiplier is used to account for torque loads that are beyond the normal conditions and are of a recurring nature. Couplings are generally selected by comparing the selection torque (SF $\times$ normal operating torque) to the coupling's maximum continuous rating. Service factors account for conditions such as a compressor fouling, changes of the pumped fluid (molecular weight, temperature, or pressure), or any other repetitive loading conditions that may occur over 10^6 revolutions of the coupling. And sometimes service factor is used to account for the real operating conditions of the equipment, which may be 5 to 20 percent above the equipment rating. Service factors should not be applied to account for starting torques or short-circuit torques, although these conditions are sometimes stated as being a multiple of normal torque.

Endurance Limit

The endurance limit is the failure strength limit of a coupling component subjected to combined constant and alternating stresses. Beyond this limit the material can be expected to fail after some finite number of cyclic loads. Below this limit the material can be expected to have infinite life (or a factor of safety of greater than 1.0).

Yield Limit

The yield limit (YL) is determined by the manufacturer to be the failure strength limit of a coupling component that will cause detrimental damage. If this limit is exceeded, the coupling should be replaced.

Coupling Rating

The coupling rating is a torque capacity at rated misalignment, axial displacement, and speed. This applies to the ratings given below.

- *Maximum continuous rating*—The maximum continuous rating (MCR) is determined by the manufacturer to be the torque capacity that a coupling can safely run continuously and has an acceptable design factor of safety.
- *Peak rating*—The peak rating (PR) is determined by the manufacturer to be the torque capacity that a coupling can experience without having localized yielding of any of its components. Additionally, a coupling can handle this torque condition for 5000 to 10,000 cycles without failing.
- *Maximum momentary rating*—The maximum momentary rating (MMR) is determined by the manufacturer to be the torque capacity that a coupling can experience without ultimate failure, where localized yielding (damage) of one of its components may occur. A coupling can withstand this occurrence for one brief duration. After that, the coupling should be inspected and possibly replaced. (This is also sometimes called the short-circuit torque rating.)

Continuous Operating Conditions and Fatigue Factor of Safety

The authors will use the flexible element of a special purpose coupling as an example of how an endurance factor of safety is calculated. This type of analysis is generally used on special purpose applications and can be used on any metallic torque transmitting component of any coupling (such as bolts, spacers, hubs, etc.).

Analysis of a Flexible Element

The diaphragm, diaphragm pack, or disc pack is the heart of a flexible element coupling and in general is the most highly stressed component during continuous operation. It must accommodate the constant (steady-state, or mean) stresses from axial displacement, torque, and centrifugal effects while also withstanding the alternating (cyclic) stresses from angular misalignment and possible alternating torques. Note that normally other components of the coupling such as flanges, tubes, and bolts may not be subjected to the same magnitudes and types of stresses.

To analyze a flexible element and determine its (and generally the coupling's) application factor of safety at different loading conditions, its endurance limit must be determined. The problem here, though, is what failure criteria should be used to determine this limit. What assumptions are made in combining the stresses? Once a criterion is selected, how is the factor of safety determined? What is an appropriate factor of safety for a particular type of coupling? There are many "correct" answers to these questions, and generally the choices are left up to the coupling manufacturers. Consider the load conditions and stresses in Table 1 for, let us say, a diaphragm coupling in a turbine driven compressor application. (Note that the stresses represented are for illustration purposes.)

Table 1. Load Conditions and Stresses for a Diaphragm Coupling.

Condition	Amount	Stress (psi)	
Torque	400.000 in-lb	42,000 psi	constant, shear
Speed	13,000	12,000 psi	constant, bi-axial
Axial displacement	+/- 0/120"	35,000 psi	constant, bi-axial
Angular Misalignment	+/- 0.25°	17,000 psi	alternating, bi-axial

In order to calculate the fatigue factor of safety, there are four basic avenues that must be taken. They are:

- Determine the basic, normal stresses that result from the stated operating conditions.
- Apply an appropriate failure theory to represent the combined state of stress.
- Apply an appropriate fatigue failure criterion in order to establish an equivalent mean, and an equivalent cyclic stress from which to compare the material fatigue strength.
- Calculate the factor of safety.

First, the way in which the above stresses in this example were determined is subject to evaluation. Various methods may be employed to determine the normal stresses shown in Table 1. These methods include classical solutions, empirical formulas, numerical methods, and finite element analysis (FEA). The accuracy of each of these methods is largely dependent on the loading assumptions made in the analysis. Second, after calculating the fluctuating normal stresses, they must be combined to provide an accurate representation of the biaxial state of stress by applying an appropriate failure theory. Many theories may be employed. The most accurate choice is generally a function of material characteristics and the type of loading. Among the failure theories that might be employed are maximum principal stress, maximum shear stress, and maximum distortion energy (von Mises). Third, after an appropriate failure theory has been applied, an equivalent constant and an equivalent alternating stress must be determined by applying an appropriate fatigue failure criterion. The possible choices here include: Soderberg criteria, Goodman criteria, modified Goodman criteria, and constant life fatigue diagrams. Lastly, a fatigue factor of safety can be determined by comparing the equivalent stress to the fatigue failure strength. In order to compare the fatigue strength to the equivalent stress, an assumption must be made as to how the stress increase is most likely to occur. The most common approach is a combination of constant and cyclic (a proportional increase of all stresses and loads) nature.

Summary of Stresses

In this example, the authors have combined the stresses using the distortion energy failure theory, and applied the modified Goodman fatigue failure criteria to obtain combined mean (constant) stress (s_m) of 87,500 psi and a cyclic (alternating) stress (s_a) of 17,000 psi. The endurance strength (s_e) is 88,000 psi, the yield strength (s_{ty}) is 165,000 psi, and the ultimate diaphragm material strength (s_{tu}) is 175,000 psi. Using a modified Goodman diagram (Figure 3), the constant and alternating stresses are plotted and, using the proportional increase method, a safety factor of 1.44 is found.

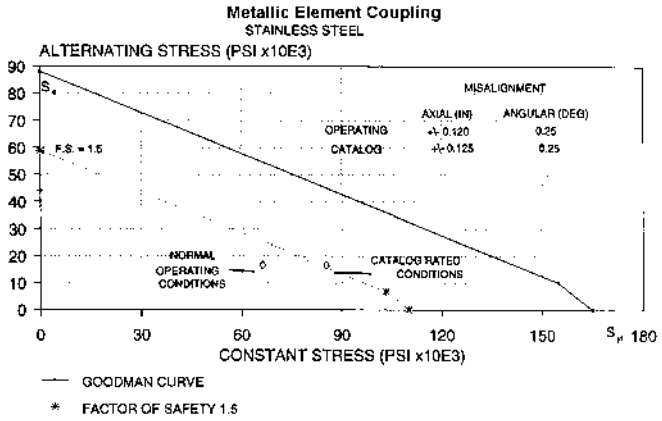

Figure 3. Modified Goodman Diagram.

Peak and Maximum Momentary Conditions

Just like continuous torque ratings, there are different ways to rate a coupling's capability to handle noncontinuous peak torques or low frequency high cyclic torques. These can be caused by such things as motor startups, short-circuit conditions, compressor surges, or other transient conditions. Some questions to ask are:

What is the nature of the load? Is it due to a synchronous motor startup with hundreds of high torque reversals during a daily startup? Is it a single unidirectional torque induction motor driver application? As for the coupling, how much capacity above the maximum continuous rating is there before serious damage to the coupling occurs? Some couplings have a catalog peak rating in the range of 1.33 to 2 times the maximum continuous catalog torque rating. Most of theses couplings can handle torques 1.75 to 2.5 times their normal rating before detrimental damage occurs.

For the factor of safety for maximum continuous rating, the authors recommend that the factor of safety be determined using the modified Goodman criteria (the most widely accepted fatigue failure criteria for steel components). The authors further recommend that these factors of safety be calculated by proportional increase in stress assumptions. For peak rating and maximum momentary rating the factor of safety is determined by the ratio of yield strength to the stresses calculated at these ratings. Note that the factors listed below are factors for rated conditions only and that the factors for a particular application (with or without service factors applied) can be expected to generally be higher.

Recommended Factors of Safety

Table 2 has been adopted by API 671 (1998). With these factors of safety one can compare couplings for a particular application. Table 2 shows the recommended minimum design factors of safety for the various ratings factor basis of safety.

Finally, the values in Table 2 are recommended as a guide and do not reflect how good a job was done in determining and combining the stresses used to obtain them. A certain level of trust is required with each coupling manufacturer, based on experience with the product and organization.

Table 2. Minimum Factors of Safety.

Coupling Capacity	Design Factor	Basis of Factor of Safety
Max. Continuos Rating	1.25-1.35 Min*	Endurance
Peak Rating	1.15 Min	Yield
Max Momentary Rating	1.0 Min	Yield

* 1.25 when limit is based on Modified Goodman
* 1.35 when limit is based on Constant Life Fatigue Diagrams

Service Factors

General Service Factors

Service factors have evolved from experience and are based on past failures. That is, after a coupling failed, it was determined that by multiplying the normal operating torque by a factor and then sizing the coupling, the coupling would not fail. Since coupling manufacturers use different design criteria, many different service factor charts are in use for the same types of couplings. *Therefore, it becomes important when sizing a coupling to follow and use the ratings and service factors recommended in each coupling manufacturer's catalog and not to intermix them with other manufacturers' procedures and factors*.

If a coupling manufacturer is told the load conditions—normal, peak, and their duration—a more detailed and probably more accurate sizing could be developed. Service factors become less significant when the load and duty cycle are known. It is only when a system is not analyzed in depth that service factors must be used. The more that is known about the operating conditions, the closer to unity the service factor can be.

API Recommended Service Factor

API 671 (1998) defaults to a 1.5 service factor for metallic element couplings and 1.75 for gear couplings. These service factors are to be applied to the normal operating torque. Note that API cautions that if reasonable attempts to achieve the specified experience factor fail to result in a coupling weight and subsequent overhung moment commensurate with the requirement for rotordynamics of the connected machines, a lower factor may be selected by mutual agreement of the purchaser and the vendor. The selected value shall not be less than 1.2.

Ratings in Summary

The important thing to remember is that the inverse of a service factor or safety factor is an ignorance factor. What this means is that when little is known about the operating spectra, a large service factor should be applied. When the operating spectra are known in detail, the service factor can be reduced. Similarly, if the properties of a coupling material are not exactly known or the methods of calculating the stresses are not precise, a large safety factor should be used. However, when the material properties and the method of calculating the stresses are known precisely, a small safety factor can be used.

Sometimes the application of service and safety factors to applications where the operating spectra, material properties, and stresses are known precisely can cause the use of unnecessary large and heavy couplings. Similarly, not knowing the operating spectra, material properties, or stresses and not applying the appropriate service factor or safety factor can lead to undersized couplings. Ultimately, this can result in coupling failure or even equipment failure.

COUPLING INTERFACE CONNECTIONS

This section will discuss coupling shaft connections: keyed and keyless shafts, splines, flange, and intermediate bushing connections.

Shrink Fit Versus Clearance Fit

The question often arises as to when to use a clearance fit versus an interference fit. Also how much shrink should one use. The following discussions will proceed from low speed, low power applications toward higher speed, high power applications. There is little risk with having more interference than necessary. There is much more risk in having less.

Clearance Fit (With Keys and Setscrews)

Keyed clearance fit couplings are used on low power/low torque/low speed applications with shafts under about 2.5 inches. The design is based on torque being transmitted through the key to minimize the play and resist the moments and forces reacted from misalignment and unbalance. Setscrews are usually provided over the key. There is no consensus in the industry about what constitutes "low power/low torque." There is pretty good agreement that speeds should be limited to 3600 rpm.

Historically this interface has been used for process pumps with straight fits. For example, API 610, "General Purpose Pumps for Refinery Applications," required light interference fits on pumps for the first time in the Sixth Edition in 1981. The reason that slip or transitional fits had been previously allowed is that the clearance fit allowed for ease of maintenance in a field environment where application of heat entailed a safety risk. Awareness of the importance of rotor balance caused the industry to move toward an interference fit, and the definition of low power shrank accordingly. More recently this issue has been discussed at great length among users and in more recent editions of 610 (1995) a looser transitional fit has been allowed. Many users successfully use clearance fits on all straight bored pump couplings, but they also generally employ high standards of alignment. The definition of "low power" is somewhat controversial.

All flexible couplings resist misalignment with reactionary moments and forces. The magnitude depends on the type and size of the coupling. These moments and forces are caused by friction in lubricated couplings and the flexing of material in nonlubricated couplings. These moments and forces can cause a loose hub to rock on its shaft. Fretting will occur that can cause failure of the shaft and/or the hub. The higher the power the greater the risk of failure. In "low power" applications the reactionary loads are relatively small.

Pump manufacturers design their shaft ends for key drive. They do this because they expect the user's maintenance forces to either intentionally open the fit for convenience or to allow it to open with time and repeated assembly/disassembly. Table 3 shows shaft data for one manufacturer's line of single-stage overhung pumps. The dimensional data are published in their catalog while the shaft and key stresses are calculated using their prescribed methods.

Table 3. Shaft Data for Single-Stage Overhung Pumps.

Bearing Brackets Size	Small	Medium	Large	Large	Large
Shaft Diameter at Coupling	1.375	1.875	2.625	2.625	2.625
Shaft Diameter at Impeller	1.25	1.875	1.875	2.375	2.625
Coupling Key Size	.312 sq by 1.375	.5 sq by 1.875	.625 sq by 2.625	.625 sq by 2.625	.625 sq by 2.625
Impeller Key Size	.25 sq by 1.5	.375 sq by 1.938	.375 sq by 2.125	.5 sq by 2.625	.5 sq by 2.625
Maximum Allowable Horsepower	100	350	500	750	1000
Shaft Stress at Coupling (psi)	3430	4734	2465	3697	4930
Shaft Stress at Impeller (psi)	4565	4734	6763	4992	4930
Key Shear Stress at Coupling (psi)	5933	6969	4063	6095	8127
Key Bearing Stress at Coupling (psi)	11867	13938	8127	12190	16254
Key Shear Stress at Impeller (psi)	7467	8992	11712	8421	10159
Key Bearing Stress at Impeller (psi)	14933	17984	23425	16842	20317

It is pretty obvious that the power is transmitted into a pump through the coupling fit. It is equally obvious that with less bearing friction, windage, and seal drag, the power is transmitted to the pumped fluid through the impeller fit. The reason that transitional or slip fits in pump couplings cause so little trouble is because the stresses involved are very low. It is a fact that most pump manufacturers specify a transitional fit on the impeller and many users pay very little attention to this fit when maintaining pumps. The impellers of single-stage overhung pumps are removed and replaced every time the seal is changed, so wear is bound to occur. Further the size of the impeller fit and key is generally smaller than the coupling fit, so the stresses are higher than in the coupling (but the coupling experiences misalignment loads).

A final thought on lightly fit coupling hubs: many general purpose disc type couplings incorporate features to prevent the spacers from being tossed out in the event of disc failure. If the discs fail, depending on the design of the coupling, the bolts can interfere between the spacer and hubs in such a way as to "wedge" the coupling hubs apart. With a light fit the hubs may move easily and the spacer capture feature can be defeated.

Shrink Fits

Keyed shrink fit couplings have been historically used for applications up to 10,000 hp and speeds into the low five figures. While many of these applications have performed with high reliability for long periods of time, there have been significant numbers of problems with these applications, and the limits have shrunk with time. Today industry generally agrees that they should be limited to a few thousand horsepower. Such applications should conform to AGMA recommendations.

For general purpose type couplings with keys, the shrink should not exceed 0.00075 in/in. Caution must be exercised when specifying heavy shrinks for keyed hubs. For general purpose equipment with keyed hubs, the purpose of the interference fit is to keep the hub axially positioned on the shaft and resist the moments and forces generated from unbalance and misalignment. If one tries (or wants) to drive totally through the shrink fit with a general purpose coupling with a key, the hub may split over the keyway(s). If it is desired for the fit to drive, it is a much better design to eliminate the key and specify a heavier interference. Some standard couplings have hubs made from materials (like cast-iron) that cannot handle the stresses that result from an interference fit.

For high horsepower and high-speed applications (API 671 (1998) and ISO) keyless fits (straight and tapered) are commonly used. The shrink for keyless fits needs to be sufficient to withstand the expected normal and transient loads. Common interference fits range from 0.0015 in/in to as high as 0.003 in/in. Table 4 shows the fits generally used with various hubs with and without keys. While this tutorial offers some methods for approximating transmission capabilities for fits, it is suggested one consult with the coupling manufacturer to find out the maximum shrink they recommend for their hubs.

Table 4. Various Hub Fits With and Without Keys.

Hub Material Hardness (BHN)	Amount of interference	Key
110	0.0003 in/in	Yes
160	0.0005 in/in	Yes
250	0.00075 in/in	Yes
160	0.001 in/in	No
250	0.00175 in/in	No
300	0.0025 in/in	No
330	0.003 in/in	No

Drive Capabilities of Interference Fits

Note that some of the information in this section comes from ANSI/AGMA 9003-A91 (1991). The design of keyless fit hubs for couplings requires the analysis of three types of factors (Figure 4).

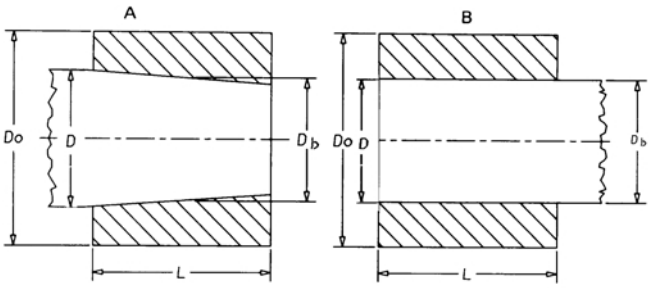

Figure 4. Dimensions for Keyless Hubs.

- The amount of interference required to handle the required torque
- The pressure required to mount or dismount the hub
- The stresses in the hub during mounting or dismounting and during operation

The equations given in this section for pressure and stress are for hubs of relatively uniform cross section. When a hub has multiple outside or inside diameters (stepped bores), as shown in Figure 5, the maximum stress is at the section with the smallest diameter and total torque capacity is the sum of the separate section capacities.

Shrink or interference fit calculations are based on Lamé's equations for a thick-walled cylinder under internal pressure.

The bore used in the calculations of pressure for tapered and cylindrical bores is shown in Figure 5. The analysis is based on the assumption that the shaft and hub have the same finish, hardness, and modulus of elasticity.

Torque Capacity of a Shrink Fit

The interference required is dependent on the torque to be transmitted, the coefficient of friction used, the dimensions of the hub, and the operating speed. The interference range is determined by either the minimum/maximum shaft and bore diameters for cylindrical bores or by the minimum/maximum hub advance for tapered bores. Torque capacity for hubs with steps or flanges (Figure 5) requires breaking the hub into sections and then summing the section values.

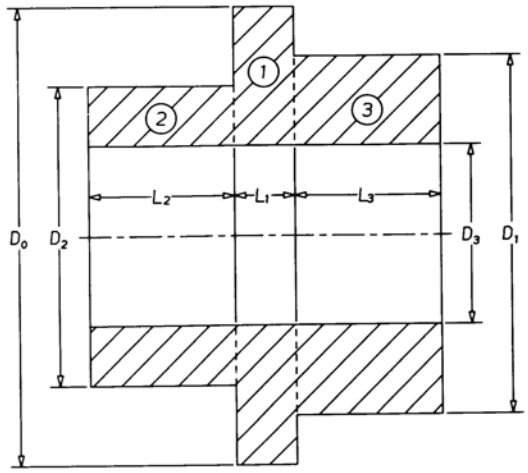

Figure 5. Step Hub Dimension.

Apparent Coefficient of Friction

The apparent coefficient of friction (μ) between the hub and the shaft can vary widely depending on such factors as cleanliness, oil type, contact pattern, surface finish, and rate of load application. Values that are commonly used are:

- μ = 0.12 to 0.15, if hydraulically mounted with each surface having a finish of 32 μin, rms maximum, and adequate draining time after mounting.
- μ = 0.15 to 0.20, if heat-shrink mounted with clean and dry surfaces, each having a surface finish of 32 μin, rms maximum.

Torque Capacity of Hub-to-Shaft Juncture

The torque capacity (T) of the hub-to-shaft juncture is a function of the hub dimensions, the interference of the hub and shaft materials, centrifugal expansion, and the coefficient of friction. The capacity should exceed the momentary torque (short-circuit torque) for the application. When the momentary torque is well defined, the hub-to-shaft torque capacity should exceed the momentary torque by a minimum factor of 1.15.

Minimum Pressure at the Hub Bore

The minimum pressure (P_{min}) at the hub bore is based on the design torque capacity, the apparent coefficient of friction, and the dimensions of the hub. The minimum pressure is calculated for the smallest hub section, which results in the lowest torque capacity of the hub-to-shaft-juncture. It is calculated as follows:

$$p_{\min} = \frac{2T}{\pi D_b^2 L \mu} \tag{6}$$

where:
T = Design torque capacity of hub-to-shaft juncture, in-lb
D_b = Average bore diameter of section, inch
L = Length of hub engagement, inch
μ = Apparent coefficient of friction

Minimum Interference Fit Required to Handle the Design Torque and the Operating Speed

The minimum interference fit (I_{min}) required to transmit the design torque capacity at the operating speed is based on the minimum pressure as calculated plus the loss of interference due to centrifugal expansion of the hub due to rotation (I_c). It is calculated for the smallest hub section, which results in a conservative torque capacity of the hub-to-shaft juncture. It is calculated as follows:

$$I_{\min} = \frac{2 p_{\min} D_b}{E\left(1 - C_e^2\right)} + I_c \tag{7}$$

where:
E = Modulus of elasticity, lb/in^2
C_e = Ratio of the average bore diameter of the section to the outside diameter of the section being analyzed (D_b/D_o)

$$I_c = 5.52 \times 10^{-14}\ N^2\ D_o^2\ D_b \tag{8}$$

Pressure Required to Mount or Dismount the Hub

The calculated pressure to mount or dismount the hub is based on the pressure generated at the hub bore from the maximum interference and a uniform hub section. The actual pressure required to mount or dismount the hub is somewhat greater than the calculated value.

Calculated Pressure to Mount or Dismount the Hub Due to Maximum Interference Fit

The calculated pressure (P_1) to mount or dismount the hub is based on the maximum interference. The maximum interference fit is equal to the minimum interference as calculated plus the tolerances of the shaft and the hub bore for cylindrical shafts or the fit increase due to the advance tolerance in the case of tapered bored hubs. The pressure is calculated as follows:

$$p_1 = \frac{E I_{\max}}{2 C_b}\left(1 - C_e^2\right) \tag{9}$$

Pressure at the Bore Required to Mount or Dismount the Hub

The maximum recommended pressure (P_2) at the bore required to mount or dismount the hub is based on the pressure (P_1) required to expand the hub section.

$$p_2 = 1.1\ p_1 \tag{10}$$

The 1.1 multiplier is based on industry practice to account for the increased pressure required for dismounting a hub of uniform cross section. For hubs of nonuniform cross section, a more rigorous analysis is required that is beyond the scope of this standard.

Hub Stress While Mounting or Dismounting

The maximum hub stress (s_{max}) due to hydraulic pressure when mounting or dismounting is based on the distortion energy (von Mises) criterion.

$$s_{\max} = p_2 \frac{\sqrt{\left(3 + C_e^4\right)}}{1 - C_e^2} \tag{11}$$

where C_e is calculated for the thinnest hub section; i.e., maximum C_e.

Industry practice is to limit the maximum stress due to mounting or dismounting to 90 percent of the yield strength.

Hub Stress While Rotating

The combined stress (s_{rot}) in the hub while rotating is calculated by the distortion energy (von Mises) criterion for each hub section as follows:

$$s_{rot} = \sqrt{\left[\left(s_H + s_V\right) + \left(s_R + s_{RV}\right)^2 - \left(s_H + s_V\right)\left(s_R + s_{RV}\right)\right]} \tag{12}$$

where:
s_H = Maximum hoop stress in the mounted hub including the loss due to rotation, lb/in^2
s_V = Hoop stress in the hub due to rotational speed, lb/in^2
s_R = Radial stress in the hub bore due to interference fit of the mounted hub while rotating, lb/in^2
s_{RV} = Radial stress in the hub due to rotational speed, lb/in^2

$$s_H = \frac{E\left(I_{\max} - I_c\right)\left(1 + C_e^2\right)}{2D_b}$$

$$I_c = 5.52 \times 10^{-14}\ N^2\ D_o^2\ D_b$$

$$s_V = 0.502\left(\frac{N}{1000}\right)^2\left(3.3D_o^2 + 0.7D_b^2\right) \qquad (13)$$

$$s_R = \frac{-E\left(I_{\max} - I_c\right)\left(I - C_e^2\right)}{2D_b}$$

$$s_{RV} = 0$$

Note that $(s_{rot}) \leq 0.7\ s_y$ is based on industry practices, which limits the stress to 70 percent of the yield strength of the material used. Rotational stresses s_V and s_{RV} are based on a homogeneous circular disc of uniform thickness with a center hole.

Hub Bore Surface Finish

The hub bore surface finish should be 32 μin rms or better. It is recommended that the shaft have a similar finish. It is also recommended that the surface be a ground finish rather than turned.

Field Experience

A refrigeration compressor was driven by a steam turbine. The compressor train had performed reliably for approximately 25 years with this turbine. ("This turbine" is noted because it was not the originally installed driver.) However coupling-end vibration levels had slowly risen on both the compressor and turbine over the most recent five years of service. Ultimately vibration levels rose to where continued operation was not prudent. Bearing clearances were on the order of 3 to 5 mils and vibration levels had reached 2.5 to 3.5 mils on both machines. Spectral analysis indicated that the coupling was out of balance. No spare coupling existed.

The existing coupling was a grease lubricated gear coupling. The plant had a strategy of eliminating lubricated couplings but delivery drove a decision to replace the coupling with another gear coupling for the short term. Duly a new coupling was purchased. Since the turbine shaft end was a plain cylinder and no ring and plug gauge were available for the compressor, the coupling was ordered without final bores being finished. The idea was to remove the existing coupling, measure and conduct blue checks, and use this information to finish the bore of the couplings.

Once the replacement coupling was available, a decision was made to shut the machine down to replace the coupling. It was expected that the turbine had a straight single key fit. This was based upon the coupling drawing in the equipment file. Unfortunately the coupling drawing described the coupling that came with the unit when it was driven by the original turbine. During the 60s the original turbine had been destroyed and replaced.

The replacement turbine is a single-stage overhung unit that was originally designed to be a boiler feed water pump. In its original configuration the machine had an overhung turbine stage on one end and an overhung pump impeller on the other end. In this case there was no pump impeller and no volute, only a coupling hub through which the compressor was driven. The turbine was rated at 2200 hp at 9100 rpm. A typical drawing of the turbine is shown in Figure 6.

It was expected that the turbine would be shutdown, the fits measured, drawings made, and the new coupling bored to size in a day or so. The new coupling would be fit to the compressor and turbine and the unit restarted in about 48 hours. When the turbine hub was removed, the plan basically died. The turbine shaft was not only different in diameter by about an eighth of an inch but there were three keys instead of one. No one in Houston had fixtures to allow broaching the three keys. The 48-hour estimate suddenly looked like a week while the coupling hub was shipped to the Northeast to cut three keyways. The coupling fit is shown in Figure 7.

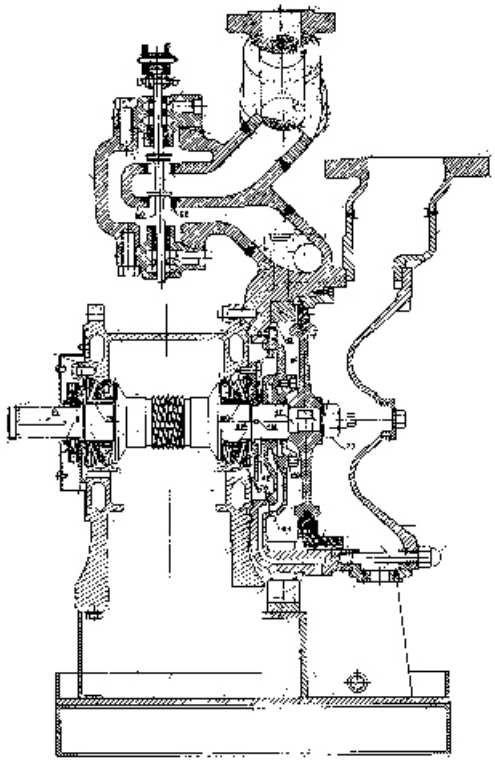

Figure 6. Turbine.

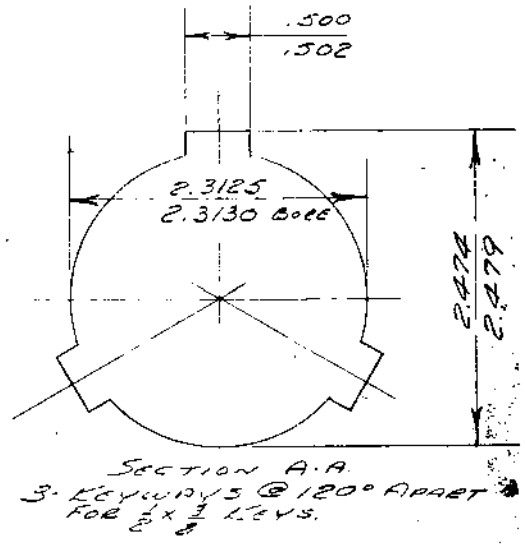

Figure 7. Turbine Coupling Fit.

It was decided to not key the coupling. The coupling would be bored to a size that would allow the interference fit alone to drive. Calculations were made that indicated a minimum interference fit of 0.0046 inch. The fit was measured and the coupling was bored. By now it was about 7 pm on a Saturday night. The unit was down and losing money. The inspector carefully measured the fit again and then the coupling bore. It was found that the bore was wrong. Instead of .002 in/in or 0.0046 mils there was a total of 0.0008 mils or 0.0003 in/in. The inspector, carefully balancing his personal versus professional life made a decision that it was close enough and fit the coupling. The machine was started and put online.

For a number of reasons this turbine was a candidate for replacement and a project was developed to accomplish this end. It took two years to get a new replacement turbine on hand and reach

a turnaround window where it could be installed. No vibration or other issues arose during the two years and the entire machinery train ran smoothly. When the turbine was finally removed from service, the craftsmen who worked the job removed the machine from its foundation and removed the coupling thinking it would be reused. The coupling came off with a mechanical puller and with very little effort. The bore was virtually unmarked except for small axial scratches corresponding to the edges of the three keyways. The coupling showed no evidence of slipping or spinning. Measurements indicated that the total interference was 0.0008 mils. The now retired inspector confirmed that this was what he found late one Saturday night. The question raised was why did the coupling not spin? The following data apply to this application:

- Rated speed: 9100 rpm
- Rated power: 2200 hp
- Rated torque: 15,231 lb-in
- Factor of safety: 7.39
- Coefficient of friction: 0.15
- Required interference: 0.0046 inch

Reversing the calculation to correspond with a total interference of 0.0008, what must the coefficient of friction have been?

- Coefficient of friction at rated power: 0.12

Tapered Shafts

Tapered shafts have the advantage that the interference between the hub and the shaft can be accomplished by advancing the hub on the shaft (the amount of advance is commonly called "take-up" or "draw-up"). For light interference fits (.0005 in/in or less) the hub can be drawn up with the shaft nut. For heavier interference fits the hub should either be heated or hydraulic methods should be used. Removal of the hub is usually easier on tapered shafts than on straight shafts with comparable fits.

The most common tapers used in the U.S. are 0.5 and 0.75 in/ft on diameter. These shallow tapers are usually self-locking. This means that the friction forces resisting hub axial movement will hold the coupling in place after installation. It also means that the force required to push the hub onto the shaft is sufficient to yield the threads on the shaft end and nut. Hence application of heat and hydraulic methods.

Applications using tapered bores require more attention than those using straight shafts because it is easier to machine two cylindrical surfaces that match than two tapered surfaces. Straight shafts and bores can be measured and their imperfections easily determined. On the other hand measurement of tapered shafts and bores is very difficult. For general purpose applications the shaft is machined or ground followed by the coupling hub. The shaft is then blued and the hub fit. The bluing transfers to the hub bore where contact is made. Historically the imperfections of special purpose shafts and coupling hub bores are determined by comparison with standard ring and plug gauges during manufacture and then confirmed with the job coupling hub and shaft.

The blue check should indicate a minimum of 50 to 80 percent contact. Most commonly users and manufacturers specify minimum contact of 70 percent, but these standards are by no means universal. The minimum contact issue is clouded by the fact that the blue check itself has some variability. This is due at least in part to the skill level of the craftsman performing the check. The more blue applied to the shaft the higher the apparent contact. If too little is applied the fit looks bad. This makes for lively conversation toward the end of equipment overhauls when a plant is down.

If less than the required contact is achieved, lapping the bore can increase the contact. If lapping is attempted it should be performed with lapping plugs or rings made from the master ring and plug gauge. If the master ring and/or plug gauge are used they are no longer master ring and plug gauges. The hub should not be used to lap the fit. If the hub is used it will create a ridge on the shaft at the end of the zero interference hub location. When a hub used in this fashion is installed it will contact the ridge and either make it difficult to install or reduce the contact in the as-installed condition. In the worst case lapping the shaft with the hub could cause the hub or shaft to fail because of stress concentrations.

Hubs with tapered fits can be overstressed if advanced too far on the shaft. As couplings are advanced to obtain the interference the outside diameter also grows (more about this later). If a gear coupling hub is advanced too far the clearance between the teeth on the hub and sleeve can reach unacceptably small values. Dirt and surface imperfections can restrain the hub advance and give the false impression that the desired interference has been reached.

To determine the draw-up required to obtain the desired interference, the following equation can be used:

$$Draw\text{-}up\ (in) = 12 \times \frac{i}{T} \tag{14}$$

where:
i = Diametral interference, in
T = Taper, in/ft

Straight Shafts with Intermediate Bushings/Locking Rings

Bushings come in two basic configurations: internal or external (Figures 8, 9, 10). Installation varies with bushing design. The net result is an interference fit between the hub and the shaft. Tightening axial screws to draw up opposing tapered rings develops the required interference.

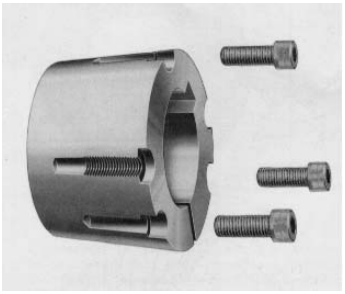

Figure 8. Intermediate Bushings (A).

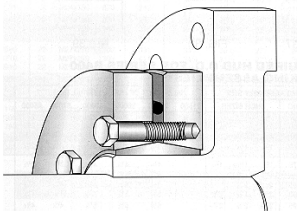

Figure 9. Intermediate Bushings (B).

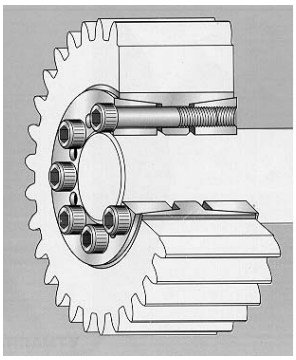

Figure 10. Locking Ring.

Although installation varies with bushing design, the net result is an interference fit between the hub and the shaft. Tightening axial screws to draw up opposing tapered rings develops the required interference. The devices are not universally accepted. For example API 610 (1995) has remained silent on their use throughout the Eighth Edition. This is because controversy exists for among other reasons the ability of the so installed hub to retain balance. For small general purpose equipment they have clear advantages.

Splines

A spline (Figure 11) is an interface connection consisting of integral keys and keyways equally spaced around a bore. In general, the teeth have a pressure angle of less than 45 degrees. If the pressure angle is over 45 degrees it is usually called a serration rather than a spline.

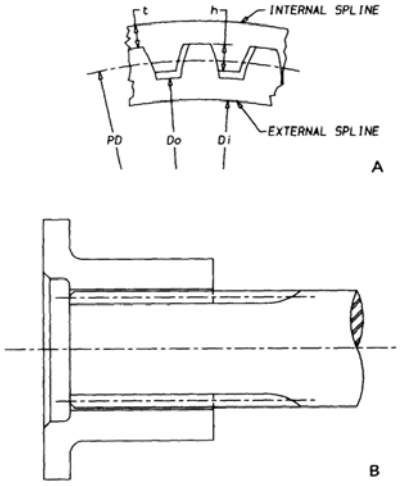

Figure 11. Spline Dimension.

Stresses for Splines

(Note that stresses assume that 100 percent of the teeth carry the load.)

Compressive stress:

$$s_c = \frac{2T}{nPDLh} \tag{15}$$

Shear stress:

$$s_s = \frac{2T}{PDLnt_c} \tag{16}$$

Bending stress:

$$s_b = \frac{2T}{(PD)^2 LY} \tag{17}$$

Bursting stress (hub):

$$s_t = \frac{T}{\pi PDL}\left(\frac{\tan\theta}{t}\right) \tag{18}$$

Shaft shear stress (shaft):

$$s_s = \frac{16TD_o}{\pi\left(D_o^4 - D_i^4\right)} \tag{19}$$

where:
Tn = Torque
n = Number of teeth
PD = Pitch diameter
L = Effective face width, inch
h = Height of spline tooth
θ = Pressure angle
t = Hub wall thickness
D_o = Diameter at root of shaft tooth
D_i = Inside diameter (ID) of shaft
t_c = PD/2n
Y = 1.5 for 30 degree pressure angle splines

Why Not Splines

One of the most power dense and accurate locating interfaces is the spline. Splines are used on aircraft engines (Figure 12). The couplings that connect to these engines usually have tight fitted splines, usually side fitted (just a little clearance) with tight fitted front and back pilots. Usually these splines have a slight interference. Therefore the hubs or matting parts are slightly heated (maybe only 100°F over ambient). Remove these hubs with a puller. In some applications where they must come off and on frequently, the pilots and the splines are coated (phosphate).

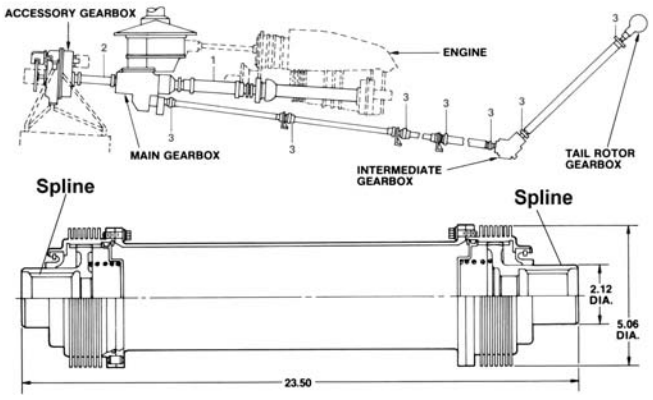

Figure 12. Helicopter Drive Coupling.

Today many gas turbines are derivatives of aircraft engines. Figure 12 shows a transmission system for a helicopter. All the couplings in the train are connected to the equipment by splines. These turbines are the basis for many industrial gas turbines and many have many spline connections internal to the engines and often the drive shafts have splines. Many have a rigid flange that is connected to this shaft. To remove the flange may require removal of the coupling, so many believe the flange is integral to the engine shaft. Below is a picture of one of these turbines (Figure 13) and the coupling (Figure 14) used with it.

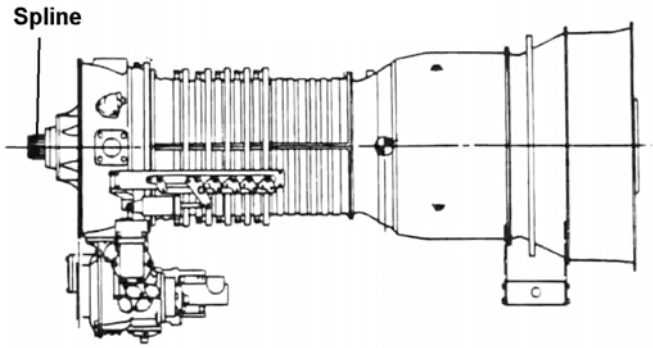

Figure 13. Gas Turbine.

Flange Connections

Most large horsepower equipment has integral flanges (Figure 15). These types of connections rely heavily on the proper designs and tightening of the bolts.

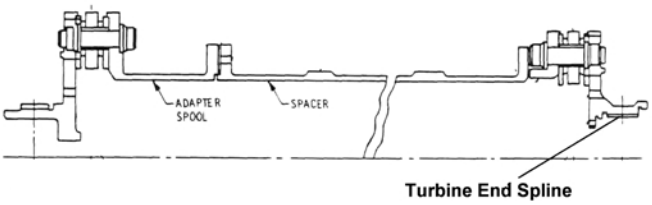

Figure 14. Splined Coupling for Gas Turbine.

Couplings resist misalignment, and the resulting "forces and moment" put a strain on the equipment and connecting fasteners. If the fasteners are loose, they are subjected to alternating forces and may fail through fatigue.

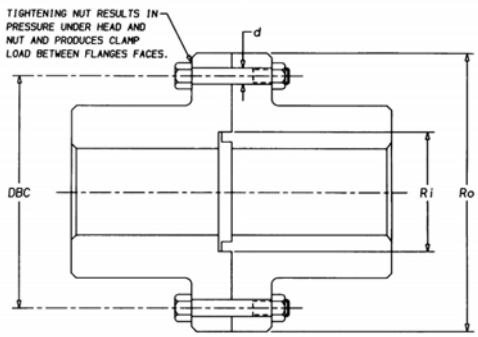

Figure 15. Bolted Flange Connection.

INSTALLATION

Straight Shafts

Clearance Fits

This type of installation is relatively simple.

1. Rotate the shaft to bring the keyway up. Install the key(s) in the shaft keyway(s). Measurements should be taken to assure the key(s) are not worn or excessively loose. Limits can be found in ANSI/AGMA 9002-A86 (1986) (refer to the later section on key fits).

2. Coat the shaft and key with a thin layer of antiseize compound.

3. Make sure that any part that will not slide over the coupling hub, such as seals, carriers, and covers, is placed back on the shaft. On gear couplings, assure the sleeves are in place.

4. Measure the shaft and hub bore to assure the fit is within specification. If the fit is too small installation may be difficult. If the fit is too large (loose) the coupling hub will be excessively eccentric to the shaft axis and the resultant unbalance may cause excessive vibration.

5. Check to assure that there is clearance between the keys at the sides of the coupling keyway and on top of the key (refer to the later section on key fits).

6. Push the hub onto the shaft until the face of the hub is flush with the ends of the shaft. (Note that some coupling hubs are not mounted flush. Check specific instructions.)

7. Lock the hub in position (usually with setscrews). Make sure that setscrews have a locking feature such as a Nyloc insert, or use locking compound. Some hubs use bolts, nuts, or other means to secure the hub in place. Check specific instructions.

Interference Fits

This type of installation is the same as that for the straight shaft, with the exception that the hubs must be heated before they slide onto the shaft. The coupling manufacturer usually supplies information as to how to heat the hub and to what temperature. For steel hubs, 160°F is required for every 0.001 inch of interference per inch of hub diameter (0.001 in/in). For example, a steel hub with a 4 inch bore with an interference of 0.003 or 0.00075/0.001 × 160°F = 120°F. Therefore, if the shaft temperature is 80°F, the hub temperature must be 200°F. This does not account for human factors such as cooling due to handling time, errors in measurements, and so on. As a general rule, add 50 to 75°F to the calculated expansion temperatures to account for these factors. The hub should be heated in an oil bath or an oven; a torch or open flame should not be used. Use of a torch or open flame could cause localized distortion or softening of the hub material. It could also cause an explosion in some atmospheres. Oil bath heating is usually limited to approximately 350°F, or under the flash point of the oil used. Special handling devices are required: tongs, threaded rods placed in taped holes in the hub, and so on. Oven heating and induction heaters offer some advantages over oil. Parts can be heated to higher temperatures (usually not exceeding 600°F) and the parts can be handled with heat-resistant gloves. In any event, care must be exercised when handling heated hubs to avoid injury to personnel.

Prior to installing the hub it is important to verify that clearance exists over the top of keys; otherwise, when the hub cools, it will rest on the key and produce high stresses in the hub that could cause it to fail.

Taper Installation

- *Light interference* (under 0.0005 in/in)—When the interference is less than 0.0005 in/in, the hub can usually be advanced without heating. Although heating the hub is the most common method, the hub can usually be advanced by tightening the retaining nut or plate on the shaft. It is also common practice when light interference is used with a combination of keys and a retaining nut or plate to use a light grease or antisieze compound between the hub, shaft, and threads on the shaft and nut. This should help facilitate installation and future removal and help prevent shaft and/or bore galling.

- *Medium interference* (usually 0.0005 to 0.0015 in/in)—When the interference is over 0.0005 in/in, the force required to advance the hub could become too large for manual assembly. When this occurs, the hub normally is heat mounted. Heating hubs for mounting is the most common method. Regardless of the method used, the amount of draw-up must be measured.

- *Heavy interference* (usually over 0.0015 in/in)—When the interference is over 0.0015 in/in, hubs are heat mounted and removed with heat and pullers.

Note: Special hubs and equipment can be designed that allows keyed tapered hubs to be mounted and dismounted hydraulically.

The following is a typical procedure that is used to mount tapered hubs. Note that some companies do not use O-rings and backup rings in the hubs. They rely on the uniform expansion of the hub as they apply the pressure in the center of the hub to maintain enough pressure to dismount. These hubs are heat mounted.

1. Conduct a blue check between the hub and shaft.

2. Determine the required amount of advance (take-up or draw-up).

3. Place the coupling on the shaft and prepare the take-up measurement or take-up stop device. Three commonly used methods are:

- Fit a split ring on the shaft with a gap equal to the take-up between the ring and the hub.

- Fit a bar with a threaded stop bolt across the face of the hub and adjust the stop bolt so that the take-up exists between the end of the bolt and the shaft end.

• Mount a dial indicator on the shaft and zero it to a reference surface on the hub.

4. Verify that clearance exists over the top of keys; otherwise, when the hub cools, it will rest on the key and produce high stresses in the hub that could cause it to fail.

5. Heat the hub and push it up to the stop or until the dial indicator shows the specified take-up.

Hydraulic Shafts

1. Check for proper contact. After the shaft and hub bore are thoroughly cleaned, spread a thin layer of mechanics blue on the shaft and push the hub snugly. A very slight rotation of the hub is permitted after it was pushed all the way. Remove the hub and check the bore for blue color. At least 80 percent of the bore should have contact.

2. Improve the contact. If less than 80 percent contact is found, the shaft and hub should be *independently* lapped using a ring and plug tool set.

3. Clean the lapped surfaces. Remove all traces of lapping compound using a solvent and lint-free towels. Immediately afterward, spread thin oil on the shaft and hub bore to prevent rusting. Recheck the hub to shaft contact.

4. Determine zero clearance (*start*) position. Without O-rings in the shaft or hub, push the hub snugly on the shaft. This is the "start" position. With a depth gauge, measure the amount the hub overhangs the shaft end and record this value.

5. Prepare for measuring the hub draw (advance). The hub must be advanced on the shaft exactly the amount specified. Too little advance could result in the hub spinning loose; too much advance could result in the hub splitting at or shortly after installation. As the overhang cannot be measured during installation, other means to measure the advance must be found. The best way is to install a split collar on the shaft, away from the hub by the amount of the specified advance. Use feeler gauges for accurate spacing (Figure 16).

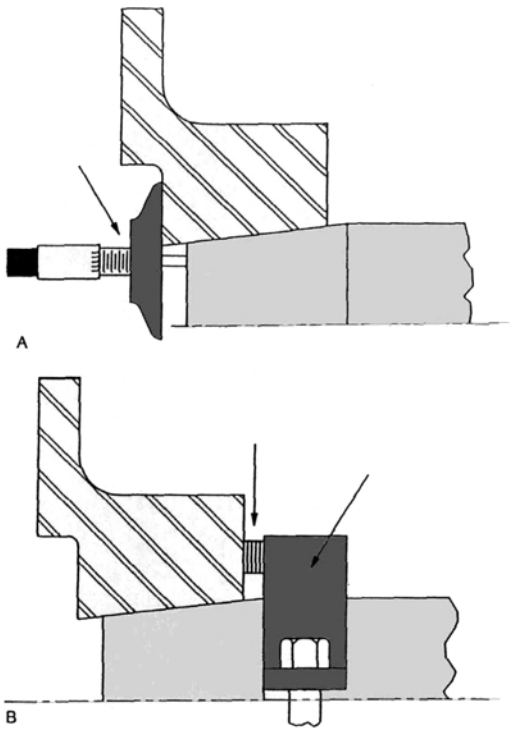

Figure 16. Means to Measure Hub Advance.

6. Install O-rings and backup rings. The oil is pumped between the hub and shaft through a shallow circular groove machined either in the hub or in the shaft. Install the O-rings *toward* this groove, the backup rings *away* from this groove. Do not twist either the O-rings or the backup rings while installing. After they are installed, look again! The O-rings must be *between* the backup rings and the oil groove! Spread a little bit of thin oil on the rubber surfaces.

7. Mount "other" components. Read the coupling installation procedure again. Must other components (such as a sleeve) be mounted on the shaft before hub? Now is the time to do it.

8. Mount the hub on the shaft. Avoid pinching the O-rings during mounting. The O-rings will prevent the hub from advancing to the "start" position. This is okay.

9. Mount the installation tool. Wet the threads with thin oil, and rotate the tool until it butts against the shaft shoulder. The last few turns will require the use of a spanner wrench.

10. Connect the hydraulic lines. Connect the installation tool to the low-pressure oil pump (5000 psi minimum). Connect the *high*-pressure oil pump (40,000 psi minimum) to the hole provided either in the center of the shaft or on the outside diameter of the hub, depending on design. Loosen the pipe plug of the installation tool and pump all the air out; retighten the plug. Both pumps *must* be equipped with pressure gauges (Figure 17).

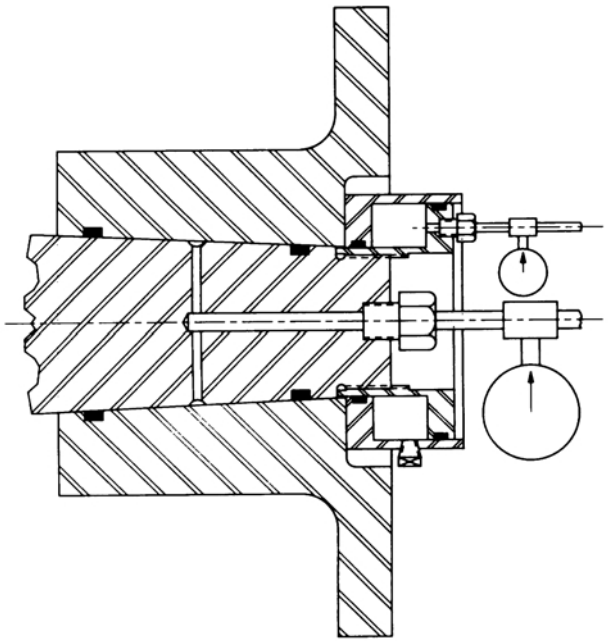

Figure 17. Hydraulic System for Hub Installation.

11. Advance the hub to the start position, through pumping the low-pressure oil pump. Continue pumping until the hub advances .005 to .010 inches beyond the start position.

12. Expand the hub. Pump the high-pressure pump until 15,000 to 17,000 psi. As the pressure increases, the hub will tend to move off the shaft. Prevent this movement by occasionally increasing the pressure at the installation tool.

13. Check for oil leaks. The hub *should not* be advanced on the shaft if leaks exist! The pressure at the high-pressure oil pump will drop rapidly at first because the air in the system escapes past the O-rings. Continue pumping until pressure stabilizes. A pressure loss of no more than 1000 psi *per minute* is acceptable. If the pressure drops faster than that, remove the hub and replace the O-rings. However, before removing the hub make sure that the leaks do not occur at the hydraulic connections.

14. Advance the hub. Increase the pressure at the installation tool and the hub will advance on the shaft. If all the previous steps were observed, the pressure at the high-pressure gauge will gradually *increase* as the hub advances. If the pressure *does not* increase, then *stop*. Remove the hub and check O-rings. If the pressure increases, keep advancing the hub until it touches the split collar or until the specified advance is reached. *Do not* allow the pressure to exceed 30,000 psi. If it does, open the pump's valve slowly and release some oil. If in doing this the pressure drops below 25,000 psi, pump the high-pressure pump to 25,000 psi, and continue the hub advance.

15. Seat the hub. *Very slowly* release *all* the pressure at the high-pressure pump. Do not work on that hub for ½ hour, or 1 hour in cold weather. After that, release all the pressure at the installation tool and remove it from the shaft.

16. Verify the advance. Measure and then record the new overhang of the hub over the shaft. Subtract from the overhang measured in the *start* position and the result *must* be the specified advance.

17. Secure the hub. Remove the split collar from the shaft and install the retaining nut, but do not overtighten. Secure the nut with the setscrews provided.

Straight Shafts with Intermediate Bushings/Locking Rings

Intermediate bushings come in two basic configurations: internal or external. Although installation varies with bushing design the net result is interference fit between the hub and the shaft. Tightening axial screws to draw up opposing tapered rings develops the required interference. Generally to assemble:

1. Insert the bushing into the hub without tightening the screws or bolts;

2. Then slide the hub and bushing onto the shaft. Since the bushing is tapered,

3. Tighten the screws or the shaft.

4. Once the hub is at the correct position, the screws should be tightened gradually in a crisscross pattern to the specific torque. Bolts are tightened on a coupling similar to the way in which lugs are tightened on the wheel of an automobile.

To facilitate the installation and the tightening of the bushing, all parts, including the bolts or the setscrews, should be oiled. Grease should *not* be used, as grease might prevent the proper tightening of the bushing. Refer to the specific instructions for further recommendations and the correct torquing value. Tapered bushings have two advantages over straight shafts:

- They slide easily onto the shaft, but once drawn up they provide for an interference fit. The interference is usually not sufficient to transmit full operating torque but the bushings incorporate integral keys or have keyways.

- They also come in standard ODs, but have various standard bores for each size. One can stock a few hubs bored for a tapered bushing but can use it on a variety of bores. It is usually an economical way to set up stock for a large plant.

There are two main disadvantages of tapered bushings:

- They increase the total cost of the coupling.

- They can cause hub failures if they are improperly installed (overtightened).

Bolt Tightening (Flange Connections)

Most instruction sheets provided with couplings give information on bolt tightening. Unfortunately, these instructions are not always followed: many mechanics tighten the bolts by feel. There are many important reasons why bolts should be properly tightened.

Couplings resist misalignment, and the resulting "forces and moment" put a strain on the equipment and connecting fasteners. If the fasteners are loose, they are subjected to alternating forces and may fail through fatigue.

- A bolt that is not properly tightened can become loose after a short period of coupling operation.

- If the pretorque is less than recommended, the bolt stretch is not correct and the bolt may not stay tight.

- Few bolts work only in tension. Most coupling bolts also work in shear, which is caused by the torque transmission. Usually, only some of the torque is transmitted through bolt shear; part of the load is transmitted through the friction between the flanges. Depending on the coupling design, as much as 100 percent of the torque can be transmitted through friction. If the bolts are not tightened properly, there is less clamping force, less friction, and more of the torque is transmitted through shear.

- Because of the combined shear and tensile stresses in bolts, recommendations for bolt tightening vary from coupling to coupling. Coupling manufacturers usually calculate bolt stresses and their tightening recommendations should always be followed. If recommendations are not available, it is strongly suggested that a value be obtained from the coupling manufacturer rather than by guessing. *Find out what the specific coupling requires*.

Bolts should be tightened to the recommended specification in at least three steps. First, all bolts should be tightened to one half to three-fourths of the final value in a crisscross fashion. Next, they should be tightened to specifications. Finally, the first bolt tightened to the final value should be checked again after all the bolts are tightened. If more tightening is required, all the bolts should be rechecked. Also, the higher the strength of the bolt, the more steps that should be taken:

- Grade 2: two or three steps

- Grade 5: three or four steps

- Grade 8: four to six or more steps

If an original bolt is lost, a commercial bolt that looks similar to the other coupling bolts should not be substituted. It is best to call the coupling manufacturer for another bolt, or they may suggest an alternative. On special purpose couplings the manufacturer will also have a specification for maximum variation of nut and bolt weight. Even if the bolt is otherwise identical in may be sufficiently different in weight to cause the machine to vibrate unacceptably. There are cases where the loss of a single nut or bolt requires the entire set to be replaced.

If room permits, always tighten the nut, not the bolt. This is because part of the tightening torque is needed to overcome friction. The longer the bolt, the more important it is to tighten the nut rather than the bolt. As there is additional friction when turning the bolt, more of the effort goes into friction than into stretching the bolt.

Some couplings use lockwashers; others use locknuts. Whereas a nut-lockwasher combination can usually be used many times, a locknut loses some of its locking properties every time it is removed from the bolt. If not instructed otherwise, *it is best to replace hex locknuts after five or six installations*. Some couplings use aircraft type bolts with either hex lock nuts or 12 point nuts. In this case, *the hex locknuts should be replaced after five or six times and the 12 point locknuts should be replaced after 10 to 15 times* (usually when they lose their locking features).

ROUGH AND SEMIFINISHED BORES

Most coupling manufacturers will supply couplings with rough or semifinished bores. This is usually done with a spare coupling so that as its equipment shafts are remachined, the spare coupling can be properly fitted. This type of coupling also helps to reduce inventory requirements.

It is important that the users properly bore and key these couplings; otherwise, the interface torque-transmission capabilities can be reduced or the coupling balance (or unbalance) can be upset. *Recommendations should be obtained from the specific coupling manufacturer*. As a general guide for straight bores, the hub must be placed in a lathe so that it is perpendicular and concentric to its controlling diameters. On rigid hubs the pilot and face are usually the controlling diameter and surface that should be used to bore (Figure 18(A)). On flex hubs (gear and chain) the gear major diameter (OD) and hub face act as the controlling diameter and surface. Note that some manufacturers use the hub barrel as the controlling diameter (Figure 18(B)). Some coupling manufacturers supply semifinished bore couplings. In this case, the finished bore should be machined using the semifinished bore as the controlling diameter. Indicate the bore-in, for concentricity and straightness.

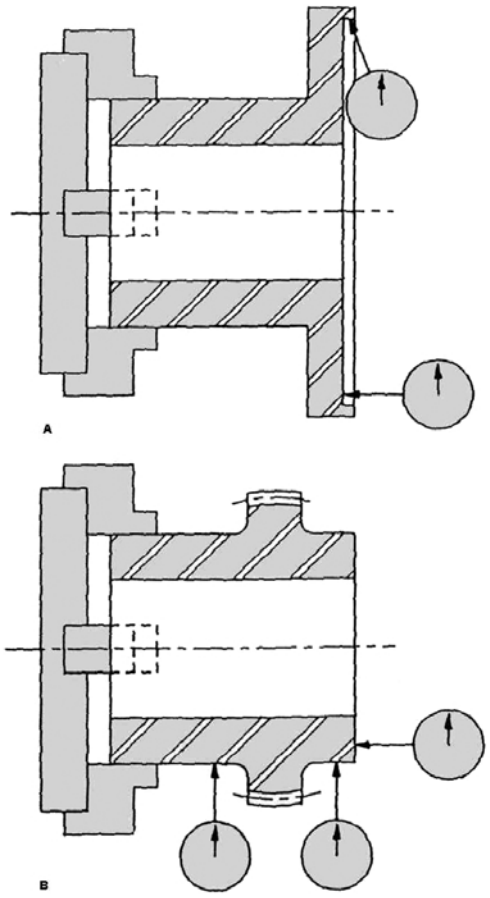

Figure 18. Boring of Rough Bored Hubs.

There are three types of errors that can occur when hubs are bored:

- The bore diameter is incorrect. Too much interference will cause installation problems and may damage the hub or shaft while too much clearance can produce unbalance forces that may be unacceptable to the system.
- The bore is eccentric, but parallel to the hub axis. This can produce unbalance forces that may be unacceptable to the system (Figure 19).
- The bore is at an angle to the OD of the hub. In this case the misalignment capacity of the coupling is reduced (Figure 20).

KEY-FIT

Most couplings must have one or two keyways cut in the hub. These should be cut according to the tolerances listed in

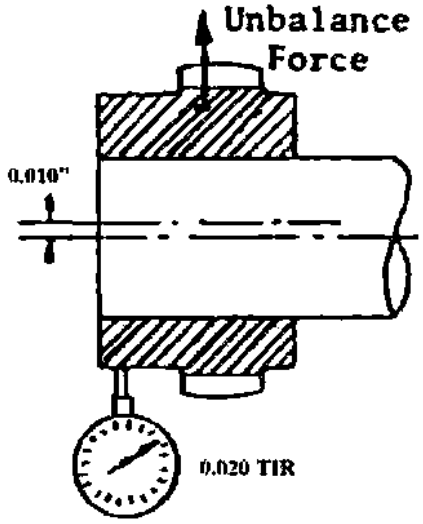

Figure 19. Eccentric Hub Bore.

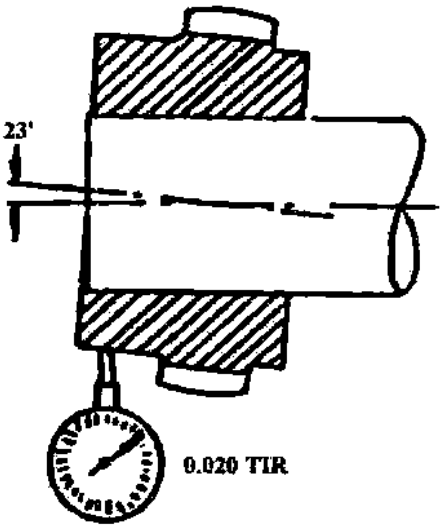

Figure 20. Skewed Hub Bore.

ANSI/AGMA 9002-A86 (1986). Particular attention should be given to the following:

- Keyway offset (the centerline of the keyways must not intersect with the centerline of bore, Figure 21)
- Keyway parallelism (Figure 22)
- Keyway lead (Figure 23)
- Keyway width and height (Figure 24)

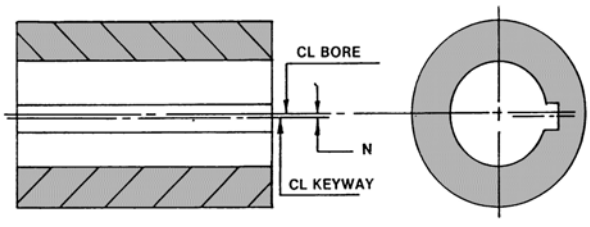

Figure 21. Keyway Lead.

The fitting of keys is important to assure the proper capacity of the interface and the AGMA standards on keyways and keys. As a general rule, three fits must be checked:

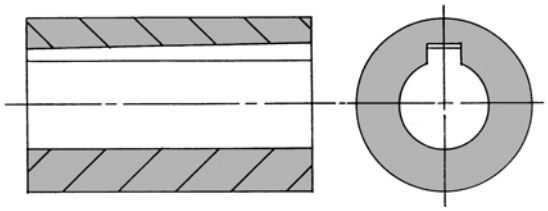

Figure 22. Keyway Parallelism.

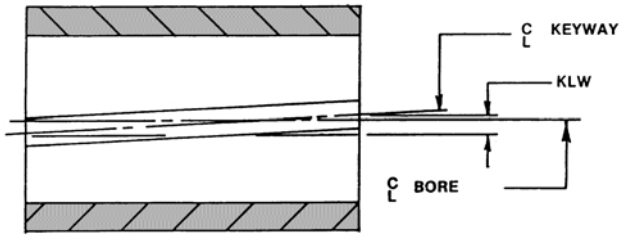

Figure 23. Keyway Offset.

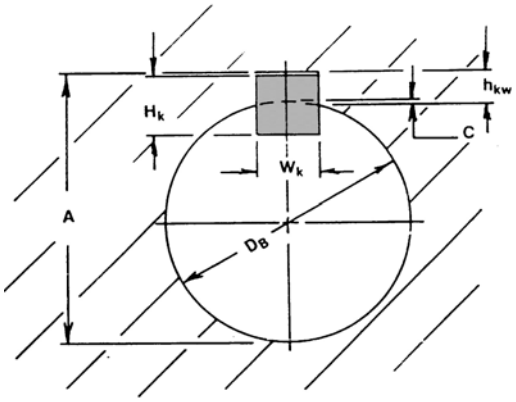

Figure 24. Keyway Width and Height.

- The key should fit tightly in the shaft keyways.
- The key should have a sliding fit (but not be too loose) in the hub keyway.
- The key should have a clearance fit radial with the hub keyway at the top of the key (Figure 25(A)).

The key should have chamfered corners so that it fits without riding on the keyway radii (Figure 25(B)). A sloppily fitted key can cause the keys to roll or shear when loaded. The results of a sloppy key fit are shown in Figure 25(C). The forces generated by torque are at distance S, and this moment tends to roll the key and can cause very high loading at the key edges. On the other hand, too tight a fit will make assembly very difficult and increase the residual stresses, which could cause premature failure of the hub and/or shaft.

A key in the keyway that is too high could cause the hub to split (Figure 25(D)). When there is too much clearance at the top or sides of a key, a path is provided for lubricant to squeeze out. For lubricated couplings, clearances between keys can be sealed to prevent loss of lubricant and thus starvation of the coupling.

Take Your Choice—A Broken Shaft or a Broken Coupling

Improper fitting of keys can end up causing a serious failure. Many times during major repairs of equipment (maybe every five to eight years), maintenance people are required to pull off the coupling hub. The removing is usually not a problem. The reassembly is often a problem. Since mounting on these keyed hubs is not often done, the proper procedure is usually not followed.

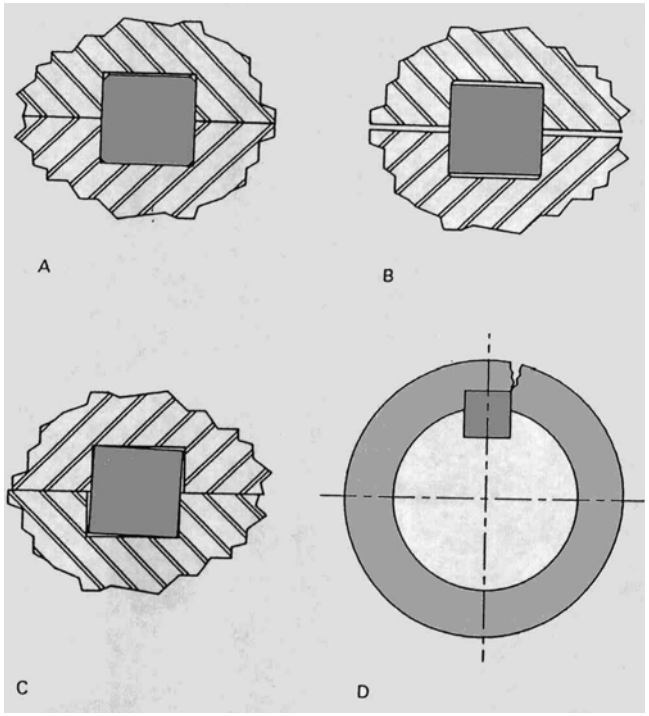

Figure 25. Key Fit.

Many times maintenance people believe that the key should be tight in all directions (no clearance over the top of the keyway). Also sometimes the key is damaged during removal and a new key must be made. So someone goes and gets some square bar and machines a key, forgetting that keyways in couplings have radii in the corners to reduce stress. Therefore one ends up with the sharp corner of the key cutting into the radii of the keyway.

Figure 26 shows an application where, during assembly, a piece of the key sheared and wedged under the keyway in the shaft. This produced a very high stress riser in the shaft, which eventually failed completely. The coupling hub with the broken shaft broke loose from the compressor, went through the coupling guard, and flew off the platform. It hit the ground and rolled into a maintenance person, breaking his ankle.

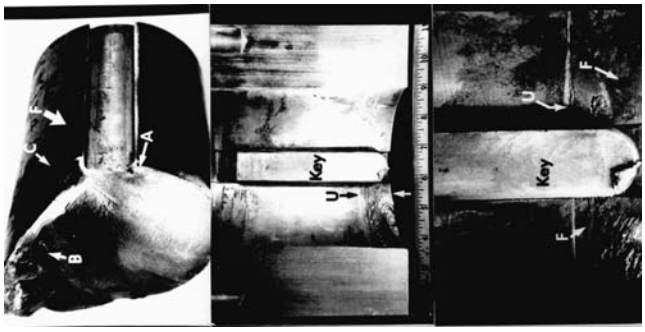

Figure 26. Broken Shaft.

Figure 27 shows a coupling where the hub and sleeve have been broken. Here the key was fitted loose in all directions. It rolled over, causing the corners to produce high stress that cracked the hub, which then caused unequal loading on the gear teeth, and eventually broke the coupling sleeve. Here no damage to the equipment occurred. The split hub and sleeve created enough unbalance to cause high enough vibration to trip an alarm and the equipment was shut down. Coupling and key were replaced.

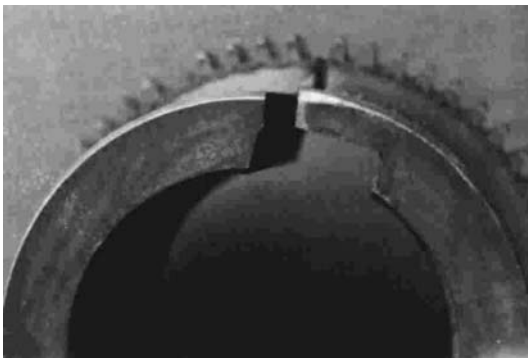

Figure 27. Broken Coupling.

SHRINK FIT EFFECT ON PILOTS

When a coupling hub is pressed on a shaft (shrink fitted), the bore expands to fit the larger shaft. Not only does the bore grow but so does any diameter directly over the bore. Therefore if the coupling has piloting fits that are directly over the shaft, they too will grow.

$$G = \frac{D_B}{D_H} \times i \tag{20}$$

where:
G = Growth of pilot, inch
D_B = Bore diameter, inch
D_H = Pilot OD, inch
i = Amount of shrink, inch

Compensation for this growth must be accounted for. Outside rabbets can grow so that the assembly becomes difficult or impossible. Inside rabbets may loosen.

REMOVING THE HUBS FROM THE SHAFTS

General

Most installed hubs need some force to be removed. The hubs can be removed by applying a continuous force or through impact. Hammering will always damage the coupling, which would be all right only if the coupling is to be replaced. However, hammering is not recommended because it can damage the bearings and seals in the equipment and even bend shafts. Interestingly API 610 (1995) added the requirement that hubs be made of steel when the fit requirement was tightened. This was specifically because many mechanics remove or axial position hubs with hammers. This is an extremely poor maintenance practice and can be an "invisible" part of poor equipment reliability. (Are slip fits the lesser of two evils?)

The first thing to do before removing the hub is to remove the locking means, such as tapered keys, setscrews, intermediate bushings, on the shaft or nut. Make sure that all retaining rings, bolts, setscrews, and so on, are loosened.

The most common way to remove the hubs is by using the puller holes (Figure 28). If the hubs have no puller holes when received, two holes can be drilled and tapped before the hub is installed on the shaft. It is best to buy them equal to one-half the hub wall thickness to ensure proper sizing. To facilitate removal, use oil to lubricate the threads and use penetrating oil between the hub and the shaft. For straight shafts use a spacer between the shaft end and the flat bar, as force has to be applied for as long as the hub slides on the shaft. If there are no puller holes, a "wheel puller" can be used; however, care should be taken not to damage the coupling. Figure 29 illustrates how not to pull on a gear coupling. Pulling on the sleeves of a coupling could damage it. The proper usage of a puller on a gear coupling is pulling from the back of the hub.

If the hub does not move even when maximum force is applied, apply a blow with a soft-face hammer. If nothing happens, heat

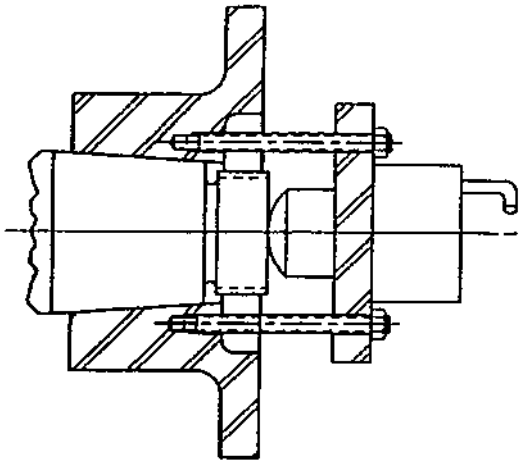

Figure 28. Hub Puller.

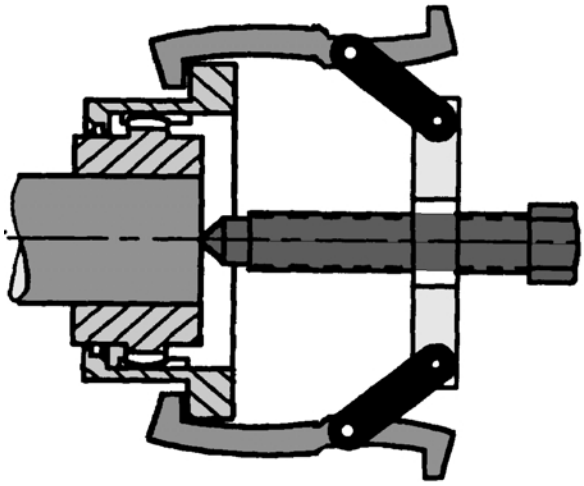

Figure 29. Incorrect Position of Puller.

must be applied to the hub. It is important to use a low-temperature flame (not a welding torch) and to apply the heat uniformly around the hub (localized temperature should not exceed 600°F for most steel). Heat does not have the same effect in this case as it has at installation, when only the hub is heated. At removal the hub on the shaft and the heat will also expand the shaft. The secret is to heat only the outside diameter of the hub, shielding the shaft from the heat. If possible, the shaft should be wrapped with wet rags. *The heat should be applied while the pulling force is being applied.*

Caution: If heat has been applied to remove the hub, hardness checks should be made at various sections before using the hub again, to assure that softening of the material has not occurred. If there is any doubt, the coupling should be replaced. Rubber components should be removed during heating. If not removed, they will have to be replaced if they come into contact with excessive heat.

The force required to remove a hub is a function of its size (bore and length) and of the interference used at installation. For very large couplings, pressure can be used in two ways for hub removal. The first is to use a portable hydraulic ram such as the puller press shown in Figure 28. The force that can be applied is limited only by the strength of all the threads and rods. There are many cases where nothing helps to remove the hub; then the hub has to be cut. This is usually cheaper than replacing the *shaft*. The place to cut is above the key, as shown in Figure 30. The cut should be made with a saw, but a skilled welder could also flame-cut the hub, taking precaution that the flame does not touch the shaft. After the cut is made, a chisel is hammered in the cut, spreading the hub and

relieving its grip on the shaft. If the hub is too thick, it can be machined down to a thin ring, then split.

If keyed hubs are to be removed often, they can be designed so they can be removed hydraulically. A groove is machined in the middle of the hub bore, in such a way that the ends of the groove do not enter the keyway. A hole(s) is drilled to connect this groove(s) to an outside oil fitting(s). Oil is pumped into the hub and with the aid of a hydraulic puller the hub can be removed.

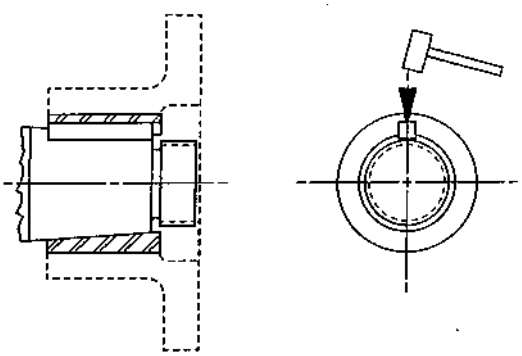

Figure 30. Hub Removal.

Dismounting of Hydraulically Fitted Hubs

In current practice, when a hydraulically fitted hub is removed, it comes off the shaft with sudden movement. Lead washers or other damping means are used to absorb the energy of the moving hub.

The dismounting method requires the use of the same tools used when mounting the hub. The following procedure is typical:

1. *Remove the shaft nut*.

2. *Mount the installation tool*. Wet the shaft threads with thin oil and rotate the tool until it butts against the shaft shoulder. There should be a gap between the tool and the hub equal to or larger than the amount of advance when the hub was installed (check the records). If the gap is less than required, the wrong installation tool is being used.

3. *Connect the hydraulic lines*. Connect the installation tool to the low-pressure oil pump (5000 psi minimum). Connect the high-pressure oil pump (40,000 psi minimum) to the hole provided either in the center of the shaft or on the outside diameter of the hub, depending on the design. Loosen the pipe plug of the installation tool and pump all air out; retighten the plug. Both pumps *must* be equipped with pressure gauges.

4. *Activate the installation tool*. Pump oil into the installation tool. The piston will advance until it contacts the hub. Continue pumping until the pressure is between 100 to 200 psi. Check for leaks.

5. *Expand the hub*. Pump oil between the hub and the shaft by using the high-pressure pump. While pumping watch both pressure gauges. When the high-pressure gauge reads about 20,000 psi the pressure at the low-pressure gauge should start increasing rapidly. This pressure increase is caused by the force that the hub exerts on the installation tool, and is an indication that the hub is free to move. Continue to pump until the pressure reaches 25,000 psi. In case the low pressure at the installation tool does not increase even if the high pressure reaches 30,000 psi, wait for about ½ hour while maintaining the pressure. It takes time for the oil to penetrate in the very narrow space between the hub and the shaft. Do not exceed 30,000 psi.

6. *Allow the hub to move*. Very slowly open the valve at the low-pressure pump. The oil from the installation tool will flow into the pump and allow the hub to move. The pressure at the high-pressure gauge will also drop. Do not allow it to fall below 5000 psi. If it does, close the valve and pump more oil at the high-pressure pump. Continue the process until the valve at the low-pressure pump is completely open and the pressure is zero.

7. *Remove the hub*. Release the high pressure and back off the installation tool until only two or three threads are still engaged. Pump the high-pressure pump and the hub will slide off the shaft. When the hub contacts the installation tool, release all the pressure and remove the tool. The hub should now come off the shaft by hand. *Do not remove the installation tool unless the pressure is zero*.

8. *Inspect O-rings*. Reusing even slightly damaged rings invites trouble. The safest procedure is to always use new seals and discard the old ones.

Intermediate Bushings

To loosen intermediate bushings, remove the bolts (usually more than two) and insert them in the alternate holes provided, making sure to lubricate the threads and the bolt (or setscrews) points. When tightened, the bolts will push the bushing out of the hub and relieve the grip on the shaft. The bushing does not have to be moved more than ¼ inch. If the bushing is still tight on the shaft, insert a wedge in the bushing's slot and spread it open. Squirting penetrating oil in the slot will also help in sliding the hub-bushing assembly off the shaft. Do not spread the bushing open without the hub on it, as this will result in the bushing breaking or yielding at or near the keyway.

SUMMARY

There are many ways to connect couplings to equipment. These interface connections are many times overlooked. If they are not carefully considered in the design of equipment one may experience many problems. Some may occur during installation, operation, or when disassembling equipment. All these aspects need to be considered in the type of connection one ultimately selects.

REFERENCES

ANSI/AGMA 9002-A86, 1986 (R1994), "Bores and Keyways for Flexible Couplings (Inch Series)," American National Standards Institute, Washington, D.C./American Gear Manufacturers Association, Alexandria, Virginia.

ANSI/AGMA 9003-A91, 1991 (R1999), "Flexible Couplings—Keyless Fits," American National Standards Institute, Washington, D.C./American Gear Manufacturers Association, Alexandria, Virginia.

API Standard 610, 1995, "Centrifugal Pumps for Petroleum, Heavy Duty Chemical and Gas Industry Services," Eighth Edition, American Petroleum Institute, Washington, D.C.

API Standard 617, 1995, "Centrifugal Compressors for Petroleum, Chemical, and Gas Service Industries," Sixth Edition, American Petroleum Institute, Washington, D.C.

API Standard 671, 1998, "Special Purpose Couplings for Petroleum, Chemical, and Gas Industry Services," Third Edition, American Petroleum Institute, Washington, D.C.

BIBLIOGRAPHY

Calistrat, M., "Flexible Coupling Installation," A Kop-Flex Paper.

Calistrat, M. M., 1980, "Hydraulically Fitted Hubs, Theory and Practice," *Proceedings of the Ninth Turbomachinery Symposium*, Turbomachinery Laboratory, Texas A&M University, College Station, Texas, pp. 1-10.

Mancuso, J., 1999, *Coupling and Joints: Design, Selection, and Application*, Second Edition, New York, New York: Marcel Dekker.