ASIA TURBOMACHINERY & PUMP SYMPOSIUM
SINGAPORE | 22 – 25 FEBRUARY 2016
MARINA BAY SANDS

TURBOMACHINERY LABORATORY
TEXAS A&M ENGINEERING EXPERIMENT STATION

TEXAS A&M UNIVERSITY

Measurements and Analysis of High Machine Vibration: A Case Study of Screw Compressor Rub

Sherif Mekawey
Principal MDS Leader
GE M&C Bently Nevada

Dum Kuebari
Lead MDS Engineer
GE M&C Bently Nevada

Authors' Biographies

Sherif Mekawey – GE M&C

- Sherif is the Technical Leader for GE Bently Nevada Machinery Diagnostics Services for Middle East, North Africa and Turkey
- Received a Bachelor of Science in Electrical Engineering from Egypt, Mansura University in 1978.
- Over 30 years experience in the field of vibration and 20 years of experience with GE M&C, covering rotating equipment balancing, condition monitoring, vibration analysis, diagnostics and root cause analysis. Published several case studies in Orbit magazines and Turbomachinery symposiums.

Dum Kuebari – GE M&C

- Dum is a Lead Machinery Diagnostics Engineer for GE Bently Nevada covering Nigeria and Sub Sahara Africa.
- Received a Bachelor of Technology Mechanical Engineering from Rivers State University of Science and Technology in 1998, and a MSc in Offshore and Ocean Technology from Cranfield University in 2005. He is a corporate member of the Nigerian Society of Engineers.
- He has over 15 years experience, 10 years with GE M&C, in the field of vibration including vibration measurements and analysis, diagnostics, root cause investigations, condition monitoring and field balancing.

Abstract

- This case study concerns a screw compressor operating in offshore process environment with unpredictable gas composition. The compressor was tripped on high vibration during startup after seals replacement. Analysis of the acquired transient vibration data indicated rub as secondary cause of the high vibration, and improper timing gears assembly as a root cause. Shop inspections confirmed rub between male and female rotors.
- Implemented recommendations ensured timely return of the compressor to service, and lessons learned prevented repeat occurrence on similar machines.

Background

- Compressor had not operated smoothly since 2006 commissioning due to seals contamination, multiple times a year
- November 2007, compressor had undergone overhaul
  - During overhaul, all bearings, seals, gears and end covers were disassembled, inspected and replaced as required
  - Rotors cleaned and reassembled
- Compressor returned to service and operated satisfactorily until March 2008
- March 2008, compressor was shutdown due to seal leaks noticed during operation
- During pressurization testing, significant seal leaks was confirmed
- During the shutdown, all 4 dry gas seals on compressor were replaced
- Female radial and thrust bearing pads also replaced
- April 2008, during startup, machine tripped on high vibration on both male and female rotors' bearings

Machinery Description

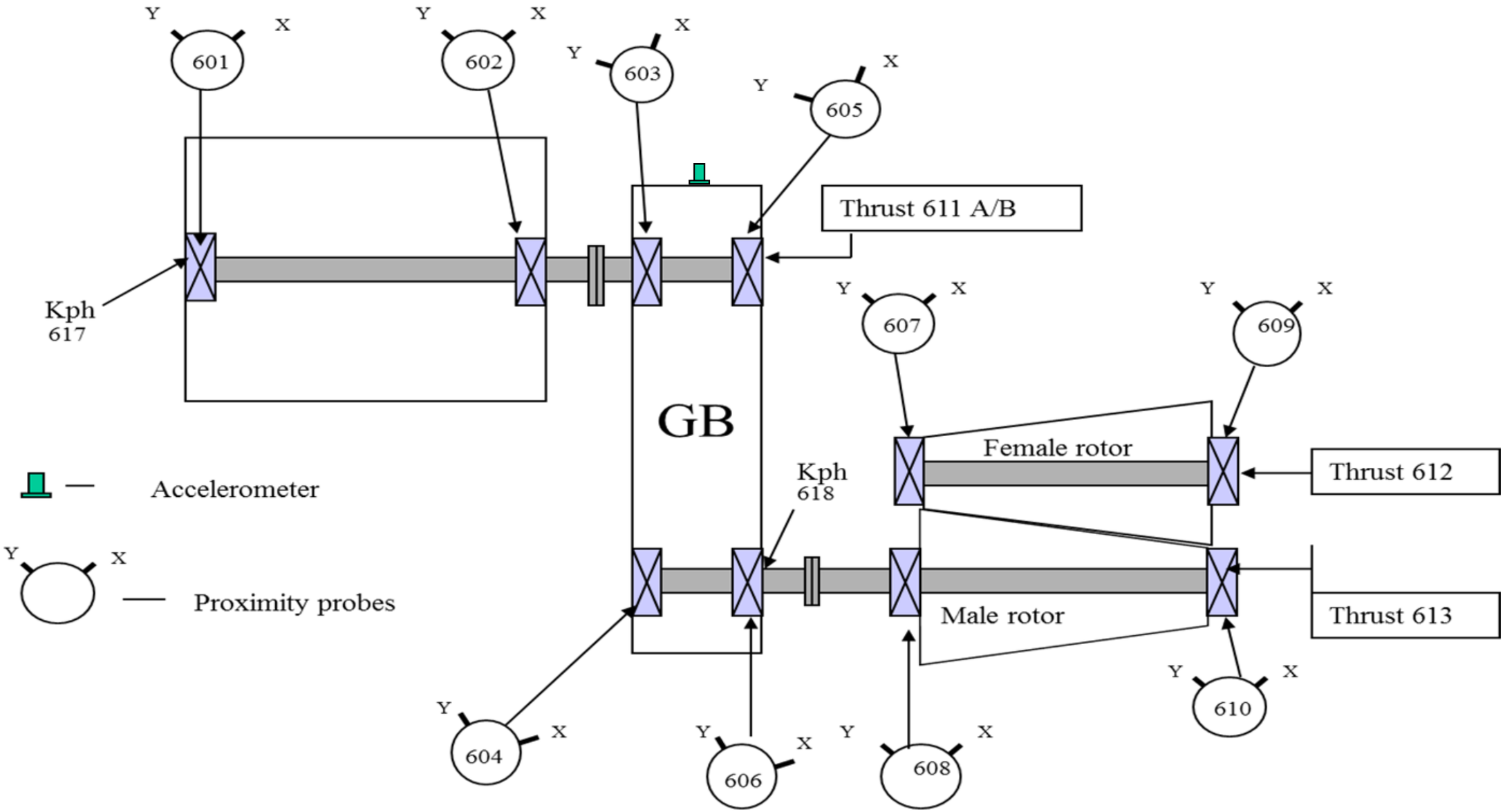

Machinery Description

- Rotary positive displacement type
- Rated speed: 4100 RPM
- CCW Male rotor and CW Female rotor
- 1st rotor critical speed above 10000 RPM
- Two impellers with helical-lobes
- 4 lobes on male rotor, 6 cavities on female rotor
- Helical timing gears at free end synchronize lobes to avoid metal-to-metal contact between the lobes
- Inlet/Discharge pressure: 5.1/22.2 bar
- Equipped with Monitoring & Protection system
- Alert/Trip: 38μm pp/50μm pp

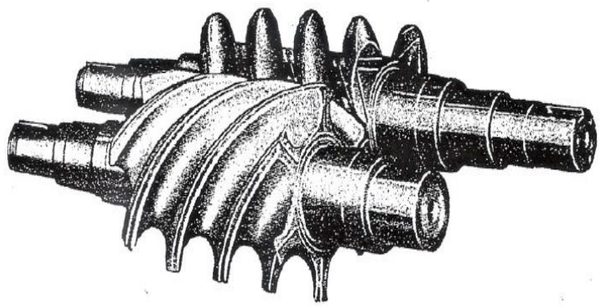

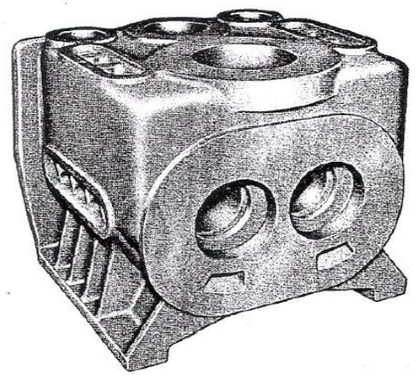

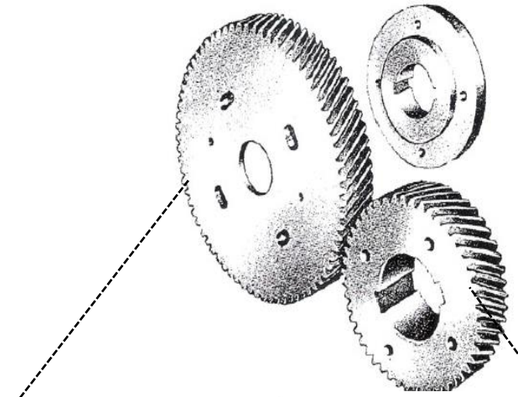

Female timing gear: 114

Male timing gear: 76

Test Plan

- Capture vibration data through monitoring system's buffered outputs from X-Y Proximity probes installed at each bearing
- Data set including transient events during startup and trip
- Data to include filtered, static and dynamic data

Compressor free end

Proximity probe installed on compressor suction end

Compressor Vibration Before Failure

- Maximum Overall vibration of male and female rotors during steady state operation were 26µm pp and 31µm pp respectively at full load
- Shapes of direct orbits were slightly oval with indication of runout on the male rotor and flat for the female's rotor free end.

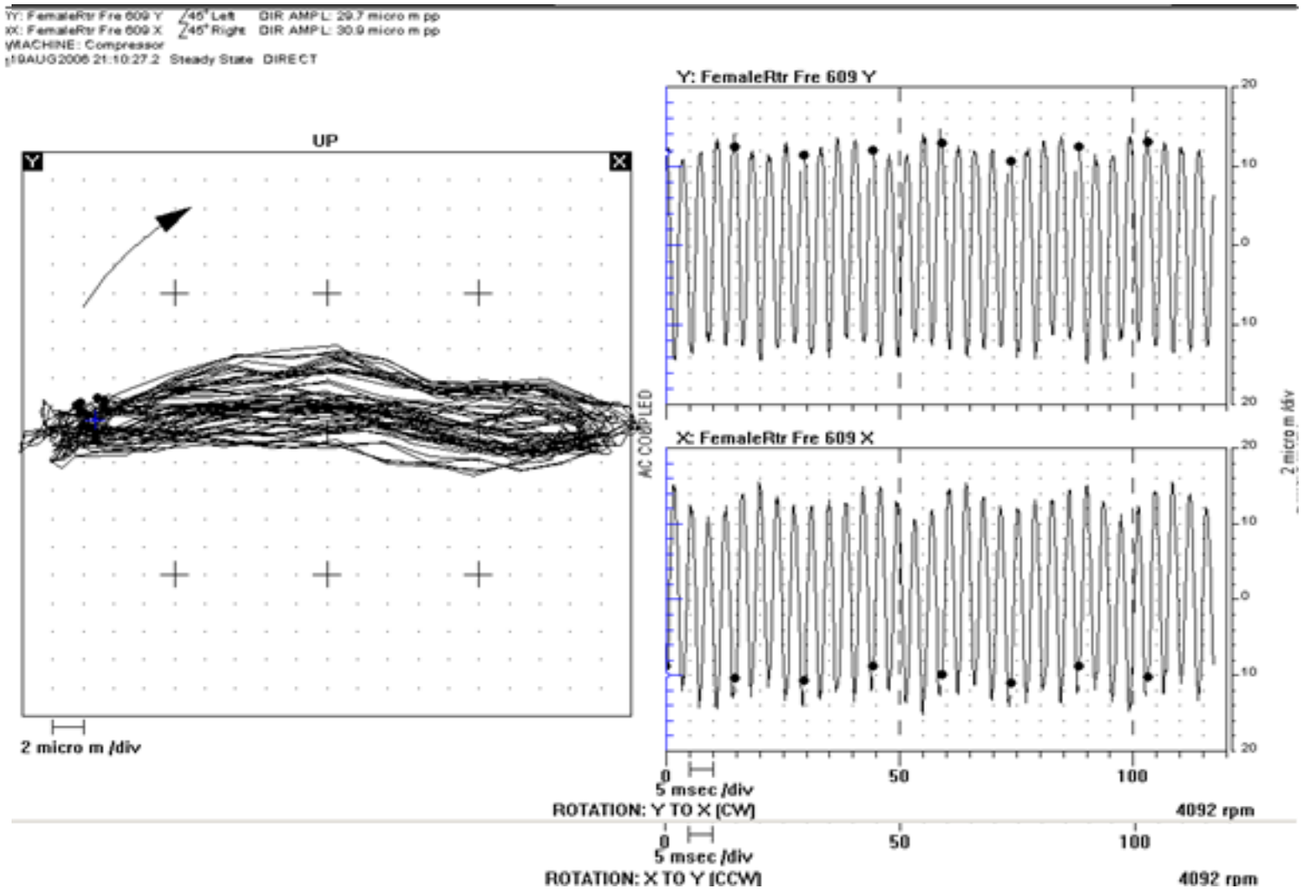

Compressor Vibration Before Failure

- **1X vibration of the male rotor free end was 3**µm pp and **negligible** on female free end during steady state operation with recycle valve fully closed
- 4X component dominated the frequency response of male and female rotors
- Presence of first harmonic of 4X component in the spectra
- 4X frequency is related to the 4 lobes on male rotor

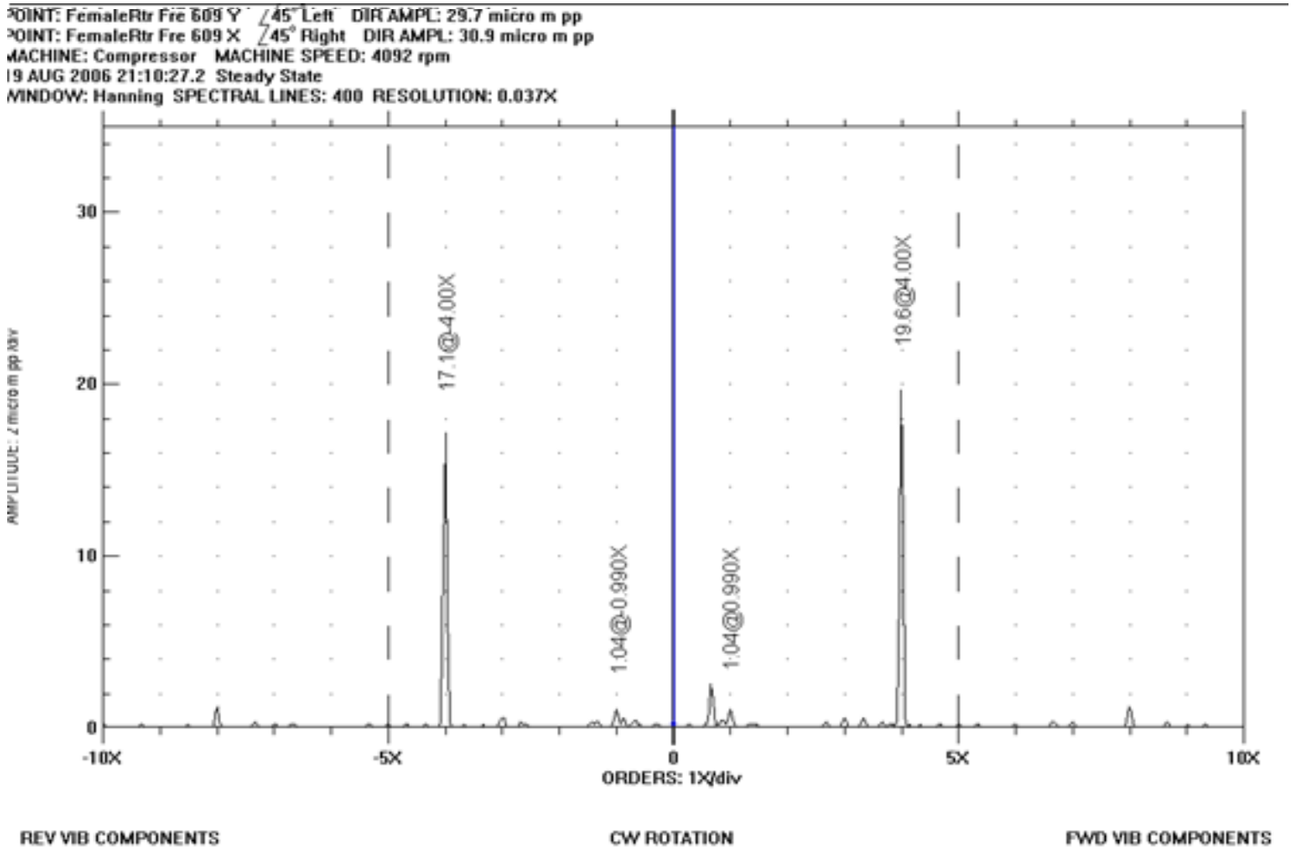

Compressor Startup Data After Seals Replacement

Unusual Direct orbits and elliptical 1X - filtered orbits of male and female free ends at same speed

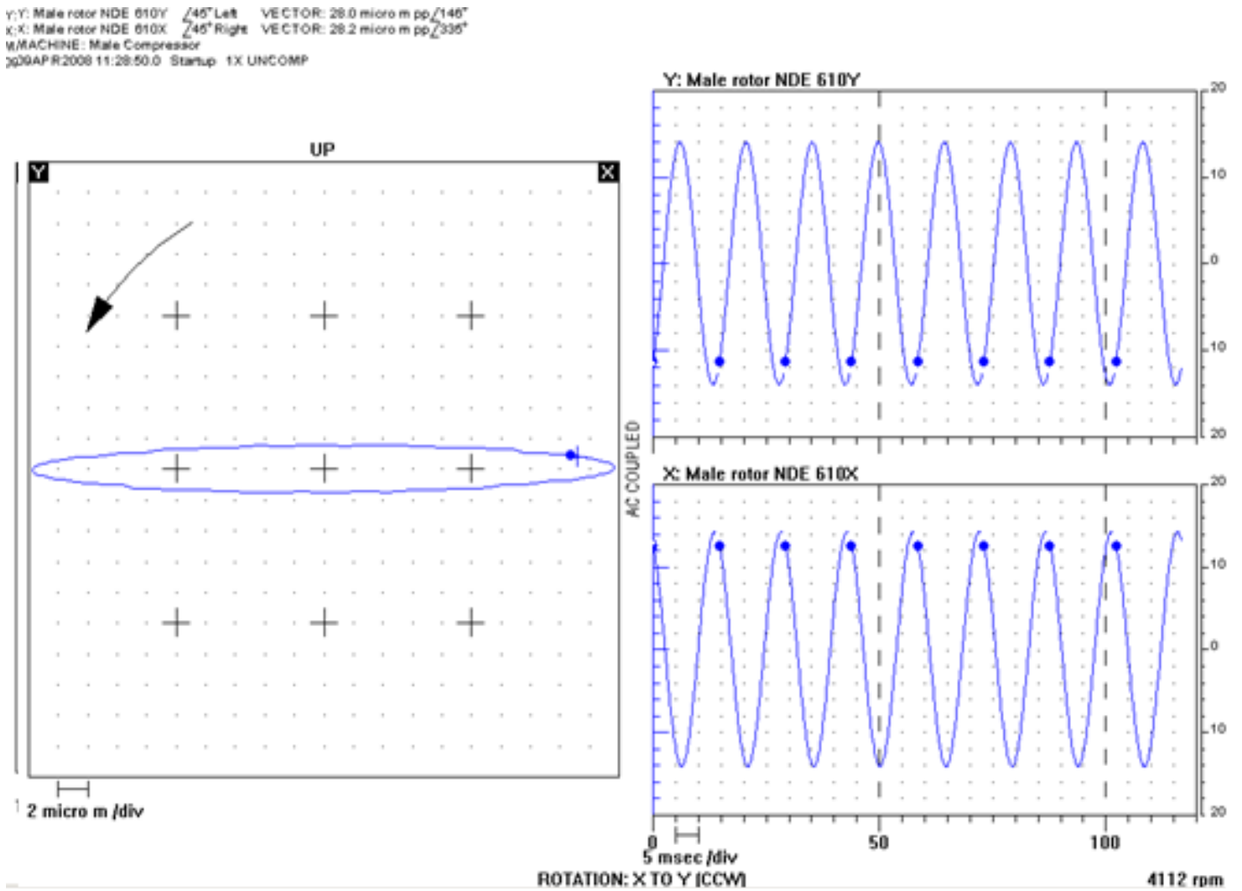

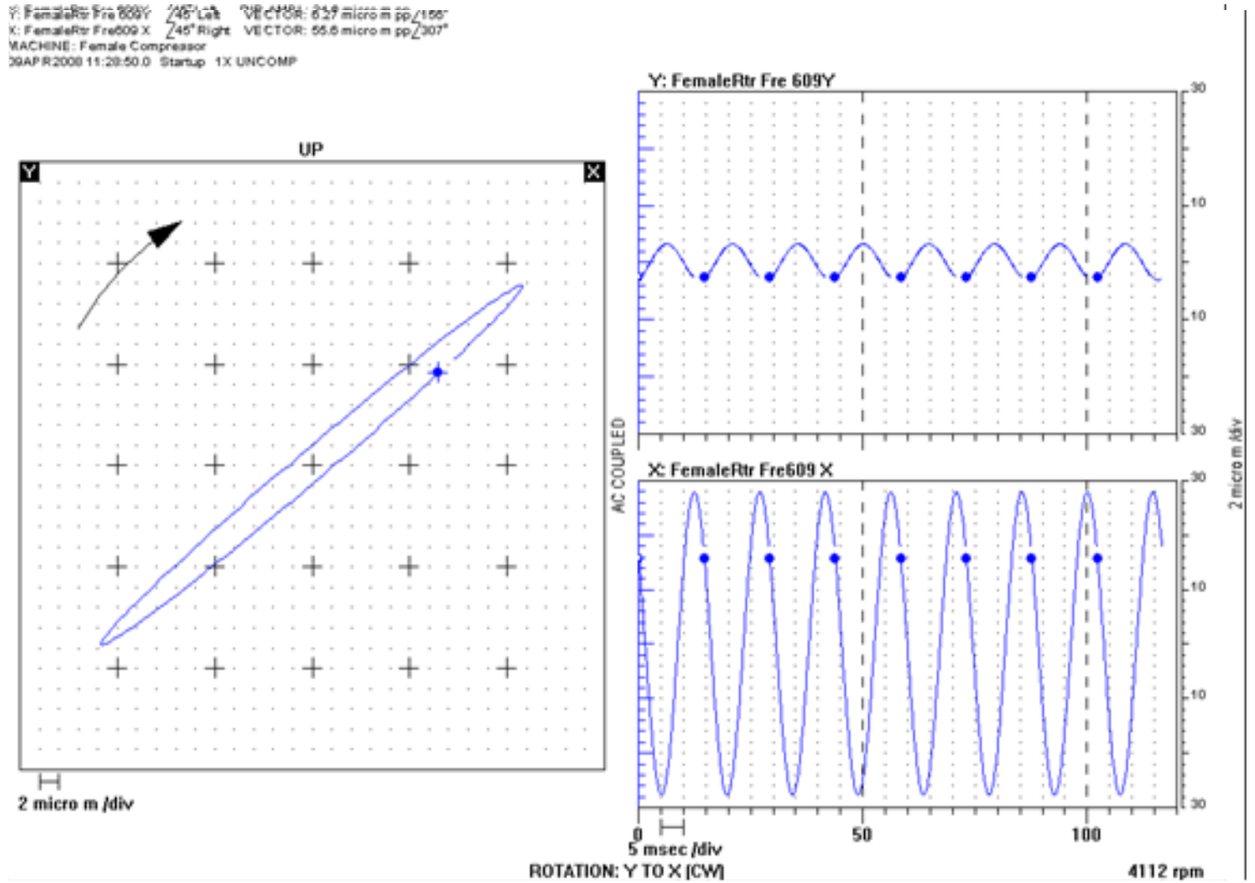

Data Analysis

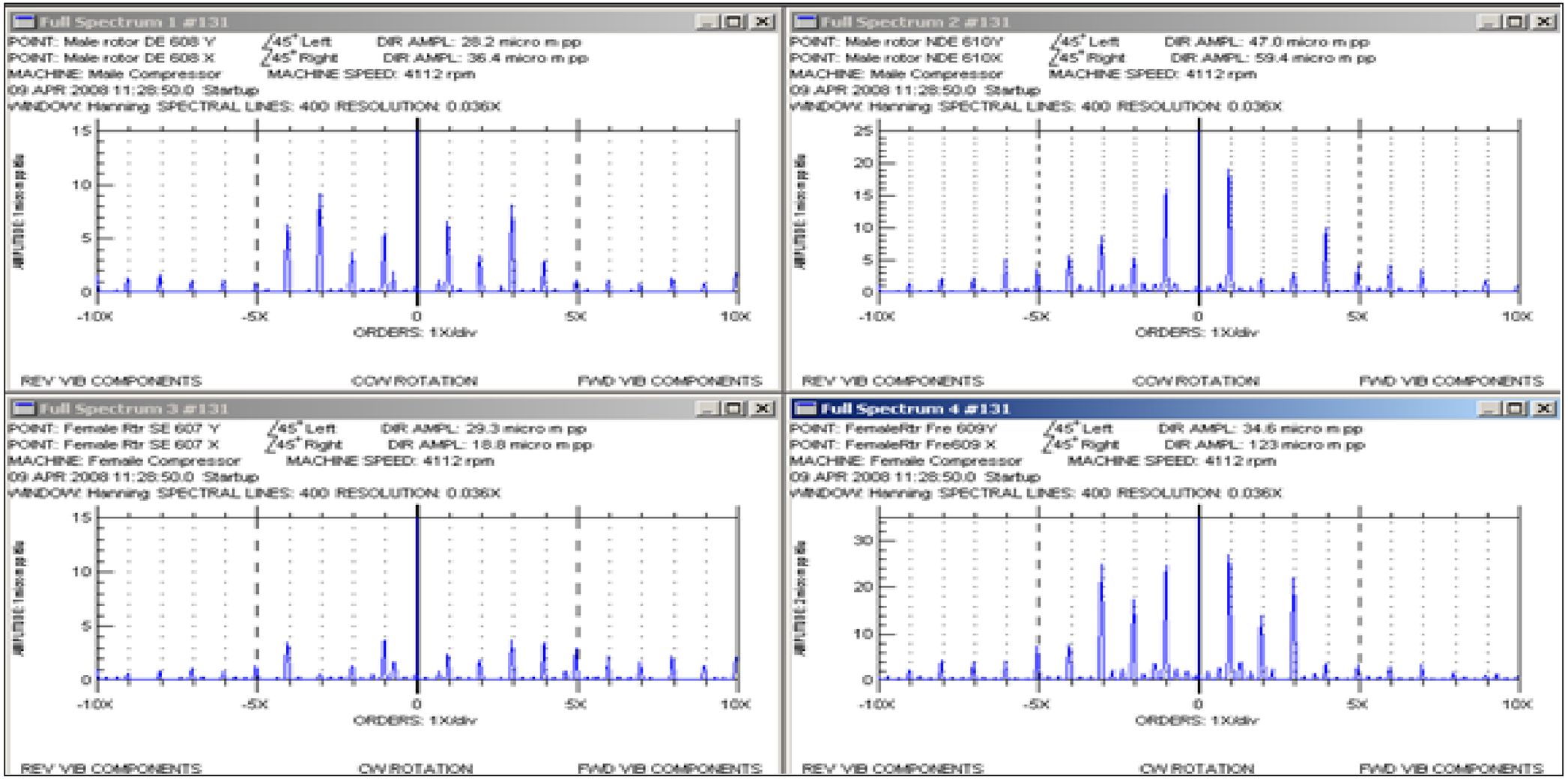

The full spectra analysis show significant vibration levels with similar amplitude for forward and reverse precession components, an indication of rub

Data Analysis

- Amplitudes of lobe pass frequency (4x component) decreased on female rotor, suggesting changes in lobe tip clearances. Presence of running speed harmonics with forward and reverse precession at harmonic frequencies on male and female rotors
- Significant reverse precession for all harmonics on male and female rotors

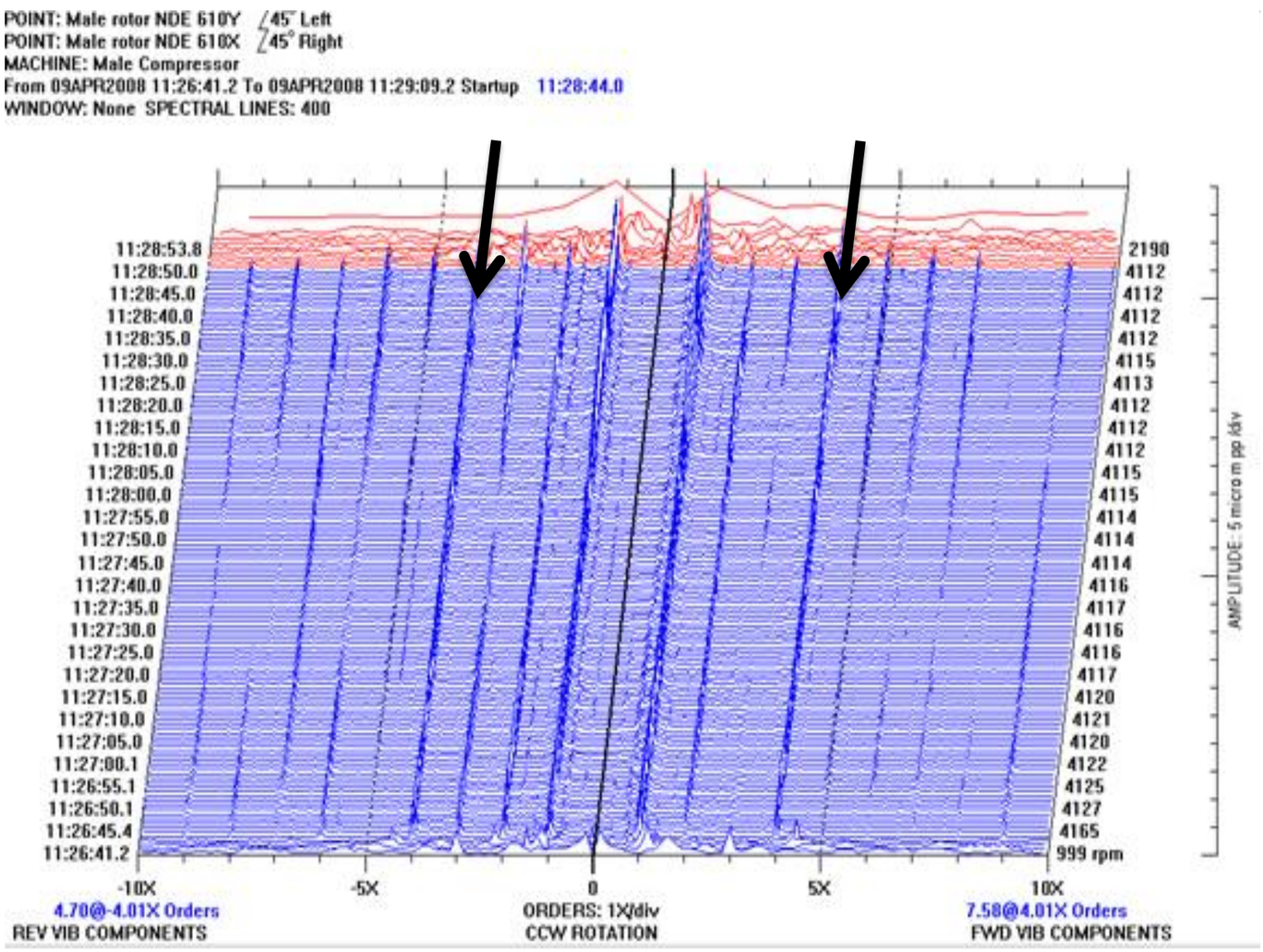

Data Analysis

- Direct and 1X amplitudes increased considerably at operating speed and was accompanied with unusual noise
- Overall amplitude reached over 100µm pp at operating speed of 4100rpm on female free end
- Considerable difference exist between 1X-filtered and direct amplitudes during run down compare to run up, indicating the dominance of other frequencies

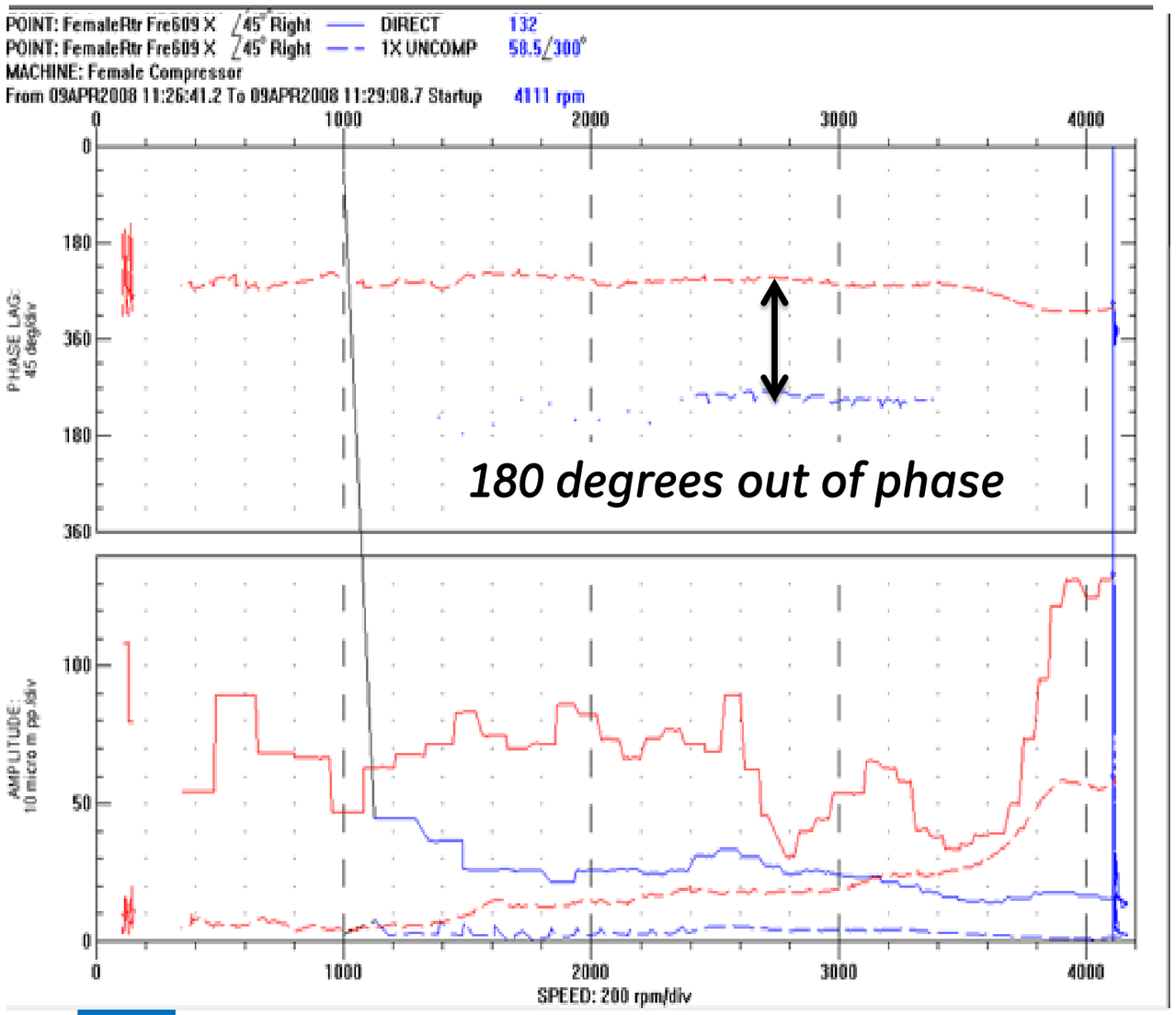

Startup
Shutdown

Data Analysis

- Shutdown data shows that high overall and 1X vibration amplitudes were sustained within 3800 - 4100rpm before decreasing with speed
- Coast down data of male rotor free end shows high direct vibration amplitudes compared to startup data due to excitation of 1X harmonics caused by rub
- 180 degrees out-of phase between shutdown and startup on female free end

Rub occurred between male and female rotors causing excitation of 1X harmonics

Conclusions

- Compressor tripped due to high vibration that reached 130μm pp and 60μm pp in X-direction of female and male rotors' free end respectively
- Bode and spectra data confirmed rub as the cause of the high vibration
  - The substantial running speed harmonic vibration and the forward and reverse precession at harmonic frequencies on male and female rotors in addition to the unusual direct orbits confirmed rubbing of the male and female rotors
  - The exponential increase in 1X amplitudes at operating speed is also indication of rub
  - The sudden change in the direction of precession immediately after trip and the unusual direct orbits at operating speed are symptoms indicative of a rotor contacting the stator
- Decrease in the amplitude of lobe pass frequency (4X component) on the female rotor indicated probable change in lobe tips clearances
- Abnormal sound on the compressor during startup was indicative of a deterioration in mechanical condition

Inspection Findings

- Rotors were inspected for evidence of rub
  - Rubbing marks were found on both male and female rotors
- Timing gears on rotor free-end were inspected
  - Timing gears discovered to be improperly set up
  - The splitter inserted in discharge-end cover to achieve gear lubrication and cooling was inspected and confirmed corroded and blocked
  - Reduced oil supply to the helical gears

Extent of rub on male and female rotors prior to removal

Inspection Findings

Areas of contact between male and female impeller lobes

Male rotor

Female rotor

Inspection Findings

Minor damage to Rotor housing

View following removal of suction end casing

Male rotor housing showing damage areas

Correctional Changes Implemented

- The conditions of the timing gears were found satisfactory during inspection, they were reused and set up correctly
- The blocked and corroded splitter in discharge end cover was replaced
- Male and female rotors were cleaned and dressed
- Runout check confirmed slight out of roundness of male rotor and it was polished
- Trim balancing was performed at low speed
- End-user contacted seal supplier to discuss permanent fix to the problem of frequent seals contamination
- Compressor started successfully and overall vibration of male and female rotors' free end reduced considerably to 21μm pp and 17μm pp respectively during steady state operation after the correctional changes.

Lessons Learned

- Attention to details and adherence to prescribed assembling procedures prevents incidental damages and production loss due to improperly installed components.
- Rub is a secondary malfunction. It is not enough to determine the effect of failure. Identifying and fixing the root cause (instead of fixing only the consequences) prevents repeatable failure.
- Seemingly minor changes in vibration signatures should be subjected to thorough investigation to determine the primary cause(s) of the changes.
- Periodic inspection and maintenance of the splitter would have prevented corrosion and blockade.
- Never ignore changes in audible sound on machines; it may be an indication of a deterioration of mechanical condition.

THANK YOU…

QUESTIONS?