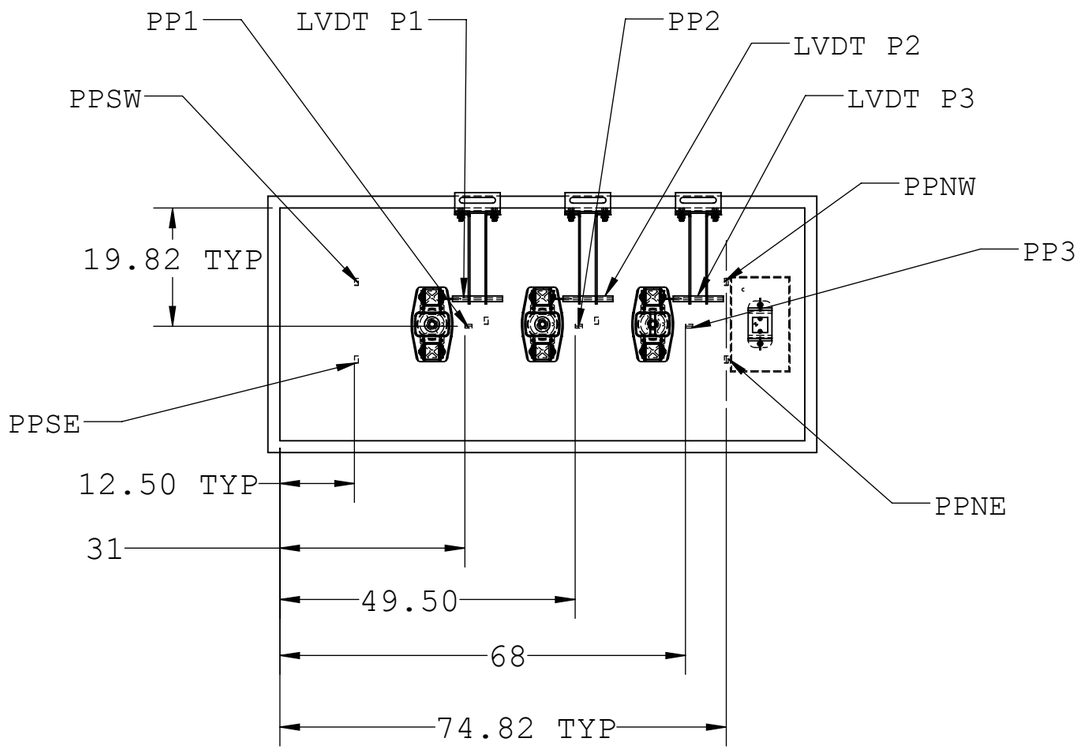

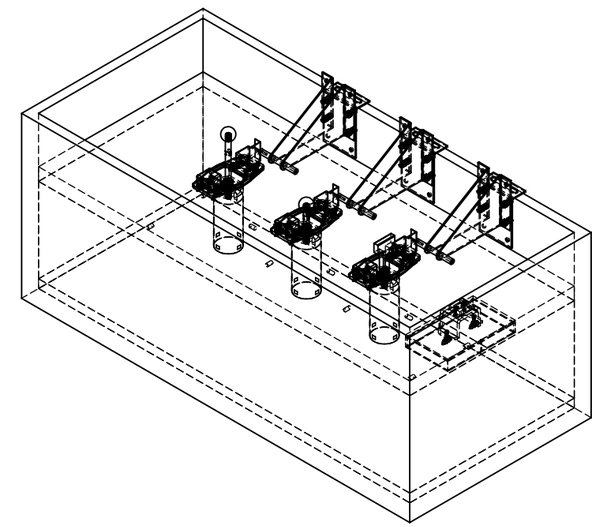

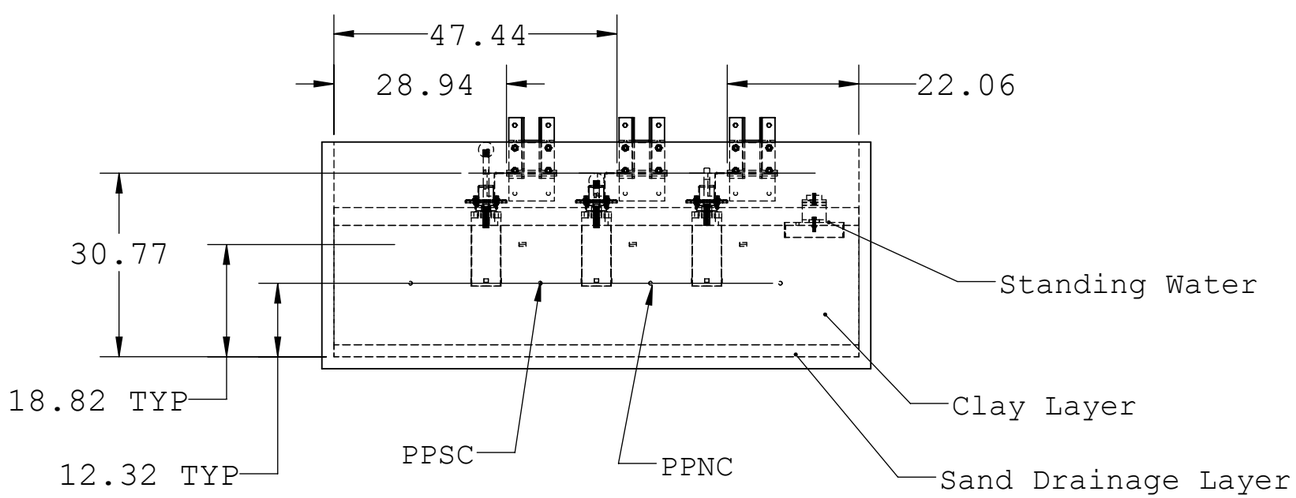

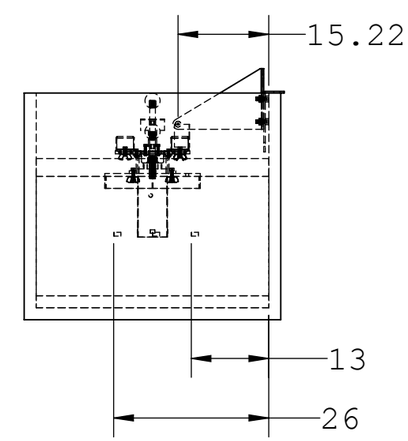

		Name	Date	Size	Scale	Units	Drawing Name	Drawing Parts
Dwight Look College of ENGINEERING TEXAS A&M UNIVERSITY	Created by	Ryan Beemer	12/08/2014	B	1:10	cm	Phase Two_Ex 2	Clay Layer, Sand Drainage Layer, Standing Water, Pile 1, Pile 2, Pile 3, Large Rigid Box, Pore Pressure Sensors
	Edited by							